LARSEN & TOUBRO

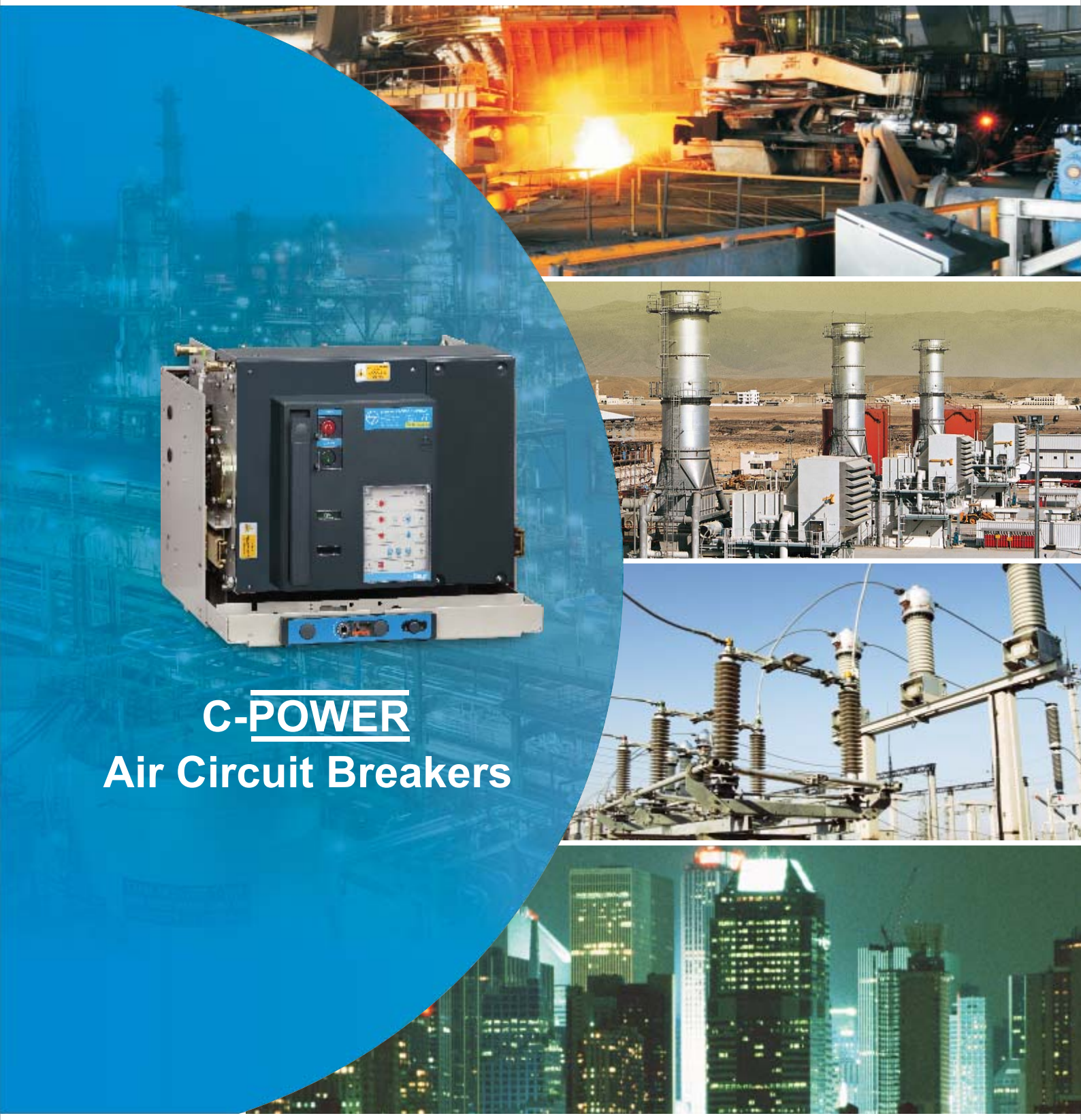

C-POWER
Air Circuit Breakers

L&T SWITCHGEAR
SAFE & SURE

ABOUT US

Switchgear Factory, Mumbai

Switchgear Factory, Ahmednagar

Switchgear Factory, Vadodara

Larsen & Toubro is a technology-driven company that infuses engineering with imagination. The Company offers a wide range of advanced solutions in the field of Engineering, Construction, Electrical & Automation, Machinery and Information Technology.

L&T Switchgear, a part of the Electrical & Automation business, is India's largest manufacturer of low voltage switchgear, with the scale, sophistication and range to meet global benchmarks. With over five decades of experience in this field, the Company today enjoys a leadership position in the Indian market with a growing international presence.

It offers a complete range of products including powergear, controlgear, industrial automation, building electricals & automation, reactive power management, energy meters, and protective relays. These products conform to Indian and International Standards.

C-POWER AIR CIRCUIT BREAKERS

L&T's Air Circuit Breakers (ACBs) are specially designed for extreme tropical conditions and have a proven track record of more than 45 years. Presently more than 5,00,000 Air Circuit Breakers supplied by L&T are being used for diverse applications. The C-POWER Air Circuit Breakers provide technologically driven solutions to meet customer needs.

Complete selectivity

Unique feature of Icu=Ics=Icw for 1 second across the entire range. This ensures complete selectivity for system with time based discrimination.

Perfect for Indian conditions

Inherent design to perform in extreme tropical conditions. Typical site conditions like high ambient temperature, humidity and dusty environment are best handled by C-POWER ACBs without compromising on performance and safety.

Optimal compactness

Designed to ensure

- Low inherent temperature rise
- Adequate interface clearances

Widest choice of over current protection releases

- Advance micro-controller based with option of communication & metering-SR71
- Micro processor based releases-SR18/SR18G/SR21i/SR18G & SR18Gi with display
- Thermo-magnetic release-DN1

Elegant design & rugged construction

- Common door cutout for entire range
- Left aligned cutout for all ratings
- Uniform height and depth for ACBs upto 4000 Amp

Range to meet every customer's need

Various options to choose from

- Breaking capacity from 50kA to 100kA
- 3 Pole or 4 Pole configuration
- Fixed or Drawout version
- Auto or Manual reset mechanism
- Independent manual or stored energy type, manual or electrically operated mechanism
- Different terminal orientations : Flat, Horizontal and Vertical

New user friendly feature

- Operational Counter will be standard offering from rating 4000A and above

User friendly features

- **Front accessible** over current release settings, telescopic racking handle and various racking interlocks; no need to open the panel door
- Unique '**Maintenance position**' in drawout type ACBs to facilitate maintenance & inspection without removing ACB from the panel
- **Multitap CTs** for enhancing protection range in DN1 release
- **Wide variety** of Amperemetric and Voltmetric releases
- **Fully rated neutral pole** for the entire range
- Lockable **sliding shutters** to prevent unauthorized access to "TRIP" and "CLOSE" push buttons
- Can be used as an **ON / OFF Load Isolator**
- Extendable **Electrical Life:**
  - By replacing the arcing contacts at site, for all ratings
  - Without changing pole assembly
- **Programmable SICs:** Auxiliary contacts in drawout ACBs are programmable for only Service, Only Test, Test and Service, and All Positions
- Protection releases are easily **interchangeable** at site
- Facility for site conversion of **manually operated** ACBs to **electrically operated** ACBs
- Jaws on breaker facilitate ease of maintenance & replacement of contact jaws

Safety

- " CE " marked for C, S1 & H ranges
- Superior quality engineering grade plastics used for insulation purpose; conforms to **Glow wire test** (Ref: IEC 60695-2-1)
- In-built **mechanical anti-pumping** to prevent auto-reclosing of ACB on persisting faults
- In-built **rating error preventor** in drawout ACBs ensure correct rating of drawout portion in corresponding cradle
- **Safety shutters** prevent accidental contact with live cradle terminals
- Variety of **Safety Interlocks**
- Easily removable **arc chutes** without use of any tool
- Operating voltage ranges from **10% Un to 110% Un** for shunt release ensures intentional tripping even at high voltage drops during short-circuit
- Transparent safety shutter offers easy inspection of cradle contacts & reduces the maintenance time

Conformance to standards

- IEC - 60947 (Part 1 & 2)
- IS/IEC - 60947 (Part 1 & 2)
- IEC 60695 - 2 - 1
- BS EN 60947 - 2

Special applications

690V Application for C Power ACB

Solution for 690V application available in C Power Family. For further details please consult our nearest branch office.

Breakers for Corrosive Environment

Solution for harsh/corrosive environment available in C Power Family. For further details please consult our nearest branch office.

C-POWER RANGE

Breaking capacities:

Icu = Ics = Icw for 1 sec

Rated Current	400A	630A	800A	1000A	1250A	1600A	2000A	2500A	3200A	4000A	5000A	6300A
CN-CS : E	50kA	50kA	50kA	50kA	50kA	50kA	50kA					
	Frame-1											
CN-CS : S1	50kA	50kA	50kA	50kA	50kA	50kA	50kA	60kA	60kA			
	Frame-1							Frame-2				
CN-CS : C			50kA	50kA	50kA	50kA	55kA	60kA			95kA	95kA
CN-CS : H			65kA	65kA	65kA	65kA	75kA	75kA				
CN-CS : H2 NEW									75kA	75kA		
CN-CS : H1/H									100kA	100kA		
			Frame-1				Frame-2		Frame-3		Frame-4	

TECHNICAL DATA SHEET




Rating (A)			400	630	400/630	800				1000				1250				1600				2000				2500			3200			4000			5000	6300
Type Designation			E	E	S1	E	S1	C	H	E	S1	C	H	E	S1	C	H	E	S1	C	H	E	S1	C	H	S1	C	H	S1	NEW H2	H1	NEW H2	H	C	C	C
Rated current (A) at 50°C	I_n		400	630		800				1000				1250				1600				2000				2500			3200			4000			5000	6300
Rated operational voltage (V), 50/60Hz	U_e*		415	415		415				415				415				415				415				415			415			415			415	415
Rated insulation voltage (V), 50/60Hz	U_i		1000	1000		1000				1000				1000				1000				1000				1000			1000			1000			1000	1000
No. of poles			3	3	3/4	3	3/4			3	3/4			3	3/4			3	3/4			3	3/4			3/4			3/4			3/4			3/4	3/4
Rated ultimate short circuit breaking capacity 50/60Hz (kA rms)	I_{cu}	380/415/500V	50	50	50	50	50	50	65	50	50	50	65	50	50	50	65	50	50	50	65	50	50	55	75	60	60	75	60	75	100	75	100	70	95	95
		690V	-	-	-	-	-	35	50	-	-	35	50	-	-	35	50	-	-	35	50	-	-	40	65	-	40	65	-	65	85	65	85	Δ	Δ	Δ
Rated service short circuit breaking capacity 50/60Hz (kA rms)	I_{cs}	380/415/500V	50	50	50	50	50	50	65	50	50	50	65	50	50	50	65	50	50	50	65	50	50	55	75	60	60	75	60	75	100	75	100	70	95	95
		690V	-	-	-	-	-	35	50	-	-	35	50	-	-	35	50	-	-	35	50	-	-	40	65	-	40	65	-	65	85	65	85	Δ	Δ	Δ
Rated short time withstand capacity 50/60Hz (kA rms)	I_{cw}	0.5 sec	50	50	50	50	50	50	65	50	50	50	65	50	50	50	65	50	50	50	65	50	50	55	75	60	60	75	60	75	100	75	100	70	95	95
		1 sec	50	50	50	50	50	50	65	50	50	50	65	50	50	50	65	50	50	50	65	50	50	55	75	60	60	75	60	75	100	75	100	70	95	95
		3 sec	-	-	-	-	-	35	50	-	-	35	50	-	-	35	50	-	-	35	50	-	-	50	65	-	55	65	-	70	85	70	85	Δ	Δ	Δ
Rated making capacity 50/60Hz (kA peak)	I_{cm}	380/415/500V	105	105	105	105	105	105	143	105	105	105	143	105	105	105	143	105	105	105	143	105	105	121	165	132	132	165	132	165	220	165	220	154	209	209
		690V	-	-	-	-	-	73.5	105	-	-	73.5	105	-	-	73.5	105	-	-	73.5	105	-	-	84	143	-	84	143	-	143	187	143	187	Δ	Δ	Δ
Rated impulse withstand voltage of main circuit (kV)	U_{imp}		8	8	12	8	12			8	12			8	12			8	12			8	12			12			12			12			12	12
Rated impulse withstand voltage of aux. circuit (kV)	U_{imp}		4	4		4				4				4				4				4				4			4			4			4	4
Typical opening time (ms)			40	40		40				40				40				40				40				40			40			40			40	40
Typical closing time (ms)			60	60		60				60				60				60				60				60			60			60			60	60
Utilization category			B	B		B				B				B				B				B				B			B			B			B	B
Suitability for isolation			✓	✓		✓				✓				✓				✓				✓				✓			✓			✓			✓	✓
Fixed			✓	✓	✓	✓	✓	✓	✓	✓	✓	✓	✓	✓	✓	✓	✓	✓	✓	✓	✓	✓	x	✓	✓	x	✓	✓	x	x	x	x	x	x	x	x
Draw out			x	x	✓	x	✓	✓	✓	x	✓	✓	✓	x	✓	✓	✓	x	✓	✓	✓	x	✓	✓	✓	✓	✓	✓	✓	✓	✓	✓	✓	✓	✓	✓
Manual			✓	✓	✓	✓	✓	✓	✓	✓	✓	✓	✓	✓	✓	✓	✓	✓	✓	✓	✓	✓	✓	✓	✓	✓	✓	✓	✓	✓	✓	✓	✓	✓	✓	✓
Electrical			x	x	✓	x	✓	✓	✓	x	✓	✓	✓	x	✓	✓	✓	x	✓	✓	✓	x	✓	✓	✓	✓	✓	✓	✓	✓	✓	✓	✓	✓	✓	✓
Electrical & Mechanical life (operating cycles) ‡			15000	15000	20000	15000	20000			15000	20000			20000				20000				20000				20000			10000			10000		5000	5000	5000
Electrical life without maintenance			6000	6000	8000	6000	8000	8000	8000	6000	8000	8000	8000	6000	7000	7000	7000	6000	7000	7000	7000	4500	5000	5000	5000	5000	5000	5000	5000	5000	5000	5000	5000	2500	2500	2500
Dimensions (in mm) Fixed	H		385	385	394	385	394			385	394			385	394			385	394			385	-	394		-	394		-	Δ		Δ		-	-	-
	W	3 Pole	316	316	326	316	326			316	326			316	326			316	326			316	-	482		-	482		-	Δ		Δ		-	-	-
		4 Pole	-	-	414	-	414			-	414			-	414			-	414			-	-	628		-	628		-	Δ		Δ		-	-	-
	D		423.5	423.5	431	423.5	431			423.5	431			423.5	431			423.5	431			423.5	-	431		-	431		-	Δ		Δ		-	-	-
Draw out	H		-	-	468	-	468			-	468			-	468			-	468			-	468	468		468			468	468		468		583	583	583
	W	3 Pole	-	-	399	-	399			-	399			-	399			-	399			-	399	555		555			555	701		701		711	913	913
		4 Pole	-	-	487	-	487			-	487			-	487			-	487			-	487	701		701			701	909		909		913	1182	1182
	D		-	-	587	-	587			-	587			-	587			-	587			-	587	587		587			587	587		587		691	691	691

* Please consult us for application at dc voltages & higher operational voltage upto 690V AC.

‡ Electrical life = Mechanical life. However, arcing contacts need to be replaced depending upon wear & tear.
Δ Please consult us.

New H2 range has replaced old HO range

PROTECTION RELEASES

Thermo-magnetic Release Type - DN1

DN1 thermo-magnetic release offers reliable protection against overload, short-circuit and earth faults via multitap Cts. with ambient temperature compensation from -5°C to 50°C.

Protection

Overload Protection (Phase)

- Unique individual phase O/L setting adjustment helps to avoid the nuisance tripping of ACBs in unbalance load condition (due to single phase loads) on distribution transformer. Overload pick-up range: 0.75 to 1 times In

Short-Circuit Protection

- Two taps on CTs (working as rating plug) help in selecting operating threshold. Short-Circuit pickup range: 5.5 to 7.5 times In with minimum impulsion time of 25 ms to prevent nuisance tripping due to transients

Earth Fault Protection

- Offered with auxiliary earth fault release module. Earth-fault pick-up range: 0.2 to 0.5 times In

Microprocessor Based Release - SR18 & SR18G

Salient Features

- Self-powered & true RMS sensing
- Comprehensive protection
  - SR18: Overload (Phase) and Short-Circuit
  - SR18G: Overload (Phase), Short-Circuit and Earth fault protection
- True Hot & Cold characteristics & switchable thermal memory
- Multi-state LED to indicate
  - Power ON condition
  - Test mode
- Individual fault annunciation through LEDs
- AN1 module for remote fault indication through LEDs with changeover contact for each kind of fault
- Provision for Self-diagnostic test (without tripping the breaker)
- Test kit (SRT-2) available for testing the releases
- Conformance to EMI/EMC standards

Type of Protection	Setting Range	
	Pick-up Current	Time Delay
Overload (Phase)	Ir - 0.5 to 1.0 times In Steps : 0.50, 0.60, 0.65, 0.70, 0.75, 0.80, 0.85, 0.9, 0.95, 1.00	2.5 sec at 6 times Ir
Short-Circuit	2 to 10 times In Steps : 2, 3, 4, 5, 6, 7, 8, 9, 10	20 ms to 600 ms Steps: 20, 60, 100, 160, 200,260, 300, 400, 500, 600 ms
Instantaneous	6 & 12 In	-
Earth Fault*	0.2 to 0.6 times In Steps : 0.2, 0.3, 0.4, 0.5, 0.6	100 to 400 ms Steps : 100, 200, 300, 400 ms & OFF

* Available in SR18G release only
In 3 phase, 4 wire system, Neutral CT is required for earth fault protection.

PROTECTION RELEASES

Microprocessor Based Release - SR18G with display

Salient Features

- Self –powered &True RMS sensing
- True Hot & Cold characteristics & switchable Thermal Memory
- Unique 3 line O-LED display (Organic LED)
- Offers comprehensive protection against Overload - Phase & Neutral, Short-Circuit, Instantaneous, Earth Fault
- Settable Overload delay
- Settable Instantaneous setting with provision of “OFF”
- I^2t ON/OFF for Short-Circuit and Earth Fault protection
- Individual Fault LED indication
- Provision for Self-diagnostic test
- Conformance to EMI/EMC standards
- Testing through Test kit
- Separate version with Zone Selective Interlocking (ZSI) - SR18Gi with display

Type of Protection	Setting Range	
	Pick-up current	Time Delay
Overload (Phase)	Ir - 0.5 to 1.0 times In Steps : 0.50, 0.60, 0.65, 0.70, 0.75, 0.80, 0.85, 0.90, 0.95, 1	0.2 to 30 sec at 6 times Ir Steps : 0.2, 0.5, 1.5, 2, 3.5, 6, 12, 17, 30 sec
Overload (Neutral)	IN -50% to 200% times Ir Steps : 50%, 100%, 150%, 200%	Same as Overload (Phase)
Short-Circuit	2 to 10 times In Steps : 2, 3, 4, 5, 6, 7, 8, 9, 10	I^2t ON = 0.02, 0.1, 0.2, 0.3, 0.4 sec I^2t OFF = 0.02, 0.1, 0.2, 0.3, 0.4, sec
Instantaneous	2 to 16 times In Steps : 2, 3, 4, 6, 8, 10, 12, 14, 16, OFF	-
Earth fault*	0.2 to 0.6 times In Steps : 0.2, 0.3, 0.4, 0.5, 0.6	I^2t ON = 0.1, 0.2, 0.3, 0.4 sec I^2t OFF = 0.1, 0.2, 0.3, 0.4, 1 sec

*In 3 phase, 4 wire system, Neutral CT is required for earth fault protection

Test-kit UN-ES1

Salient Features

- Test-kit for SR18G/SR18Gi with display
- Operates from 230V AC supply & generates single-phase voltage test signals
- Tests the release for
  - Phase fault i.e. for overload, short-circuit and instantaneous protection
  - Earht fault protection
- Test current multiples
  - For phase faults: 2.5 In, 4.5 In, 6.5 In, 9.5 In, 11 In, 13 In
  - For earth fault: 0.25 In, 0.35 In, 0.45 In, 0.55 In
- Five 7-segments LED display indicates the trip time (two places after decimal)

PROTECTION RELEASES

Microprocessor Based Release - SR21i

Salient Features

- Self-powered & True RMS sensing
- Inbuilt Zone Selective Interlocking (ZSI)
- Provision for Self-diagnostic test(without tripping the breaker)
- True Hot & Cold characteristics & switchable Thermal Memory
- Multi-state LED to indicate
  - Power ON condition
  - Test mode
- Individual fault annunciation through LEDs
- Provision for AN1 module for remote fault indication through LEDs with changeover contact for each kind of fault
- Direct tripping of breaker-reliable tripping with minimum time delay
- Test kit available for testing the release (SRT-2)
- Realistic hot and cold curves which take into account integrated heating effect
- Conformance to EMI/EMC standards

Type of Protection	Setting Range	
	Pick-up Current	Time Delay
Overload (Phase)	Ir - 0.5 to 1.0 times In Steps : 0.50, 0.60, 0.65, 0.70, 0.75, 0.80, 0.85, 0.9, 0.95, 1.00	0.2 to 30 sec. at 6 times Ir Steps : 0.2, 0.5, 1, 1.5, 2, 3.5, 6, 12, 17, 30 Sec
Short-Circuit	2 to 10 times In Steps : 2, 3, 4, 5, 6, 7, 8, 9, 10	20 ms to 600 ms Steps : 20, 60, 100, 160, 200, 260, 300, 400, 500, 600 ms
Instantaneous	2 to 16 times In Steps : 2, 3, 4, 6, 8, 10, 12, 14, 16, OFF	-
Earth Fault*	0.2 to 0.6 times In Steps : 0.2, 0.3, 0.4, 0.5, 0.6	100 to 400 ms Steps : 100, 200, 300, 400 ms & OFF

In 3 phase, 4 wire system, Neutral CT is required for earth fault protection.

Test-kit SRT-2

Salient Features

- Test-Kit for SR18/SR18G/SR21i Releases
- Operates from 230V AC supply & generates single-phase voltage test signals
- Tests the release for
  - Phase fault i.e. for overload, short-circuit and instantaneous protection
  - Earth fault protection
- Test current multiples
  - For phase faults: 2.5 In, 4.5 In, 6.5 In, 9.5 In, 11 In, 13 In
  - For earth fault: 0.25 In, 0.35 In, 0.45 In, 0.55 In
- Five 7-segments LED display indicates the trip time (two places after decimal)

PROTECTION RELEASES

Microprocessor-based, Communication-capable Release - SR71

Salient Features

- True RMS sensing
- Offers comprehensive protection for overload, short-circuit, instantaneous, earth fault and neutral overload
- High resolution backlit LCD display
- Intelligent Pre-trip alarm to prevent system shutdown
- Password protected settings and commands
- MODBUS RTU protocol with intrinsic RS 485 port
- LED indication for POWER ON, different faults and Pre-trip alarm
- 2 sets of storable protection settings
- Last 5 trips & 128 Event records with time & date stamping
- 3 programmable contacts-1 for micro controller failure, 2 for basic fault annunciation
- 4 relay contacts for indication of exceeding maximum demand, Pre-trip alarm and control on breaker (closing and opening)
- Rating-plug for precise protection at lower load currents
- Auto-doubling features to prevent nuisance tripping
- Selectable I^2t based current for short-time and earth fault zones
- Thermal reflectivity enables faster tripping on recurrent overloads
- Inbuilt Zone Selective Interlocking
- Provision for Self-diagnostic test
- Conformance to EMI/EMC standards

	Parameter		Screen Abbreviation	Details	Factory Settings
Overload (Phase)	Current Settings (A), Ir = In x		PICK-UP	0.4 to 1.0 In in steps of 0.05 In	1.0 In
	Time Delay, Tr (sec) at 6 x Ir		TMS-Tr	0.5-1-2-4-6-12-18-24-30	30 sec
	Pre-trip Alarm Settings		PREALAR	0.5 to 0.95 Ir in steps of 0.05 Ir	0.95 Ir
	Thermal Reflectivity		THM-MEM	ON / OFF	OFF
	Function		FUNC	Enable / Disable	
Neutral Fault	Current Settings (A), In = Irx		PICK-UP	0.5-1.0	1.0 Ir
	Time Delay (sec)		DELAY	Same as 'Overload (Phase)'	30 sec
Short-Circuit	Current Settings (A), Isd = In x		PICK-UP	2 to 10 In in steps of 0.5 In	10 In
	Time Delay, tsd (msec) at 10 x In	I^2t OFF	DELAY	20-100-200-300-400	400 msec
		I^2t ON	DELAY	20-100-200-300-400	400 msec
	Pre-trip Alarm Settings		PREALAR	0.5 to 0.95 Is in steps of 0.05 Is	0.95 Is
	I^2t		I^2t	ON / OFF	
	Cold-load Pick-up		COLDPIC	Enable / Disable	Disable
	Cold-load Pick-up Delay		CP-DLY	0.1 to 10 sec in steps of 0.1 sec	0.1 sec
Instantaneous	Function		FUNC	Enable / Disable	Enable
	Current Settings (A), Ii = In x		PICK-UP	2 to 16 In in steps of 0.1 In	16 In
Earth Fault	Function		FUNC	Enable / Disable	Enable
	Current Settings (A), Ig = In x		PICK-UP	0.1 to 0.6 in steps of 0.05 In for I^2t ON	0.6 In
				0.1 to 0.6 in steps of 0.01 In for I^2t OFF	
	Time Delay (sec), tg		DELAY	100 to 400 msecs in steps of 100 msec for I^2t ON	3 sec
				0.1 to 5 sec in steps of 100 msec for I^2t OFF	
	Pre-trip Alarm Settings		PREALAR	0.5 to 0.95 Ig in steps of 0.05 Ig	0.95 Ig
	I^2t		I^2t	ON / OFF	OFF
	Cold-load Pick-up		COLDPIC	Enable / Disable	Disable

Note: Both Protection Groups 1 & 2 carry the same factory settings.

ADDITIONAL PROTECTIONS

Parameter		Screen Abbreviation	Details	Factory Settings
Under Current	Function	FUNC	Enable / Disable	Disable
	Current Setting (A) x In	PICK-UP	15% to 80% in steps of 5% In	0.8 In
	Time Delay (secs)	DELAY	1 to 255 in steps of 1 second	1 second
	Trip / Alarm	MODE	Either / Both	Alarm
Current Unbalance	Function	FUNC	Enable / Disable	Disable
	Current Setting (A) x In	PICKUP	10% to 95% in steps of 5% In	0.2 In
	Time Delay (secs)	DELAY	1 to 10 in steps of 5 secs	2.0 secs
Over Voltage #	Function	FUNC	Enable / Disable	Disable
	Voltage Setting (V) Vs = Vn x ..	PICK-UP	105% to 150% in steps of 5% Vn	1.2 Vn
	Time Delay (secs)	DELAY	0.1 to 100 in steps of 0.1 secs	5.0 secs
	Reset Voltage	RSTSET	85% to 98% in steps of 1% Vs	0.95 Vs
	Trip / Alarm	MODE	Either / Both	Alarm
Under Voltage #	Function	FUNC	Enable / Disable	Disable
	Voltage Setting (V) Vn x ..	PICK-UP	45% to 65% in steps of 5% Vn	0.6 Vn
	Time Delay (secs)	DELAY	0.1 to 5 in steps of 0.1 secs	1 second
	Reset Voltage	RSTSET	102% to 115% in steps of 1% Vs	1.02 Vs
	Trip / Alarm	MODE	Either / Both	Alarm
Under Frequency #	Function	FUNC	Enable / Disable	Disable
	Frequency Setting (Hz)	PICK-UP	45 to 50Hz for 50Hz in steps of 0.01Hz	48.0Hz
			57 to 60Hz for 60Hz in steps of 0.01Hz	59.0Hz
	Time Delay (secs)	DELAY	0.1 to 100 secs in steps of 0.1 Second	0.2 secs
	Drop Off Frequency	DRPOFF	0.02 to 0.10Hz in steps of 0.1Hz	0.1Hz
	Trip / Alarm	MODE	Either / Both	Alarm
Over Frequency #	Function	FUNC	Enable / Disable	Disable
	Frequency Setting (Hz)	PICK-UP	50 to 55Hz for 50Hz in steps of 0.01Hz	52.0Hz
			60 to 62Hz for 60Hz in steps of 0.01Hz	61.0Hz
	Time Delay (secs)	DELAY	o.1 to 100 secs in steps of 0.1 second	0.2 secs
	Drop Off Frequency	DRPOFF	0.02 to 0.10Hz in steps of 0.1Hz	0.1Hz
	Trip / Alarm	MODE	Either / Both	Alarm
Reverse Power #	Function	FUNC	Enable / Disable	Disable
	Settings (kW)	PICK-UP	0.02 to 0.4 in steps of 0.01 Pn	0.2 Pn
	Time Delay (secs)	DELAY	1 to 100 in steps of 0.1 secs	2.0 secs
	Trip Alarm	MODE	Either / Both	Alarm
Phase Sequence #	Function	FUNC	Enable / Disable	Disable
	Settings	PICK-UP	123 - 132	123
	Time Delay (secs)	DELAY	0 to 5 in steps of 0.5 secs	2 secs
	Trip / Alarm	MODE	Either / Both	Alarm
Breaker Failure	Function	FUNC	Enable / Disable	Disable
	Time Delay (secs)	DELAY	0.05 to 2 secs in steps of 0.01 secs	1.0 second
Maximum Demand Exceed	Function	FUNC	Enable / Disable	Disable
	Settings (kW)	PICK-UP	40 kW - 1600 kW	100 kW
	Step	DELAY	10 kW - 1000 kW	10 kW
i - Discrimination		*i* -Discrimination	Enable / Disable	Disable

Requires SR71-PM module

METERING

Parameter	Screen Abbreviation	Details
Current	I	Phase, Earth and Neutral
	Imax	Maximum running Current per Phase
	%Load	Percent Loading
Voltage#	V	Phase-Neutral
	Vph-Vph	Phase-Phase
Frequency #	F	System Frequency
Power Factor #	PF	System Power Factor
Power #	kW	Active Power per Phase and Total (kW)
	kVAr	Reactive Power per Phase and Total (kVAr)
	kVA	Apparent Power per Phase and Total (kVA)
	kW	Maximum Demand (kW)
Energy #	kWh	Total Active Energy (kWh)
	kVArh	Total Reactive Energy (kVArh)
	kVAh	Total Apparent Energy (kVAh)
Harmonic-Current	I1HAR	R-Phase Current Harmonics
	I2HAR	Y-Phase Current Harmonics
	I3HAR	B-Phase Current Harmonics
Harmonic-Voltage #	V1HAR	R-Phase Voltage Harmonics
	V2HAR	Y-Phase Voltage Harmonics
	V3HAR	B-Phase Voltage Harmonics
Display		High Resolution Backlit LCD

Requires SR71-PM module

ADDITIONAL FEATURES

Parameter	Screen Abbreviation	Details
LED Indications	Auxiliary Power ON	✓
	Overload	✓
	Short-Circuit	✓
	Instantaneous	✓
	Earth Fault	✓
	Neutral Fault	✓
	Trip	✓
	Alarm	✓
Auxiliary Supply		24V DC
Digital Inputs		4 Nos.
Output Relays		3 Internal + 4 External Relays
		240V AC / 5A, 30V DC / 5A (resistive load)
Rating Plug	In Multiplier	630-800-1000-1250-2000-3200-5000
Communication	Protocol	MODBUS RTU
	Link used	RS 485
Maintenance Indication		I^2t based
Event Records (128)		Pick-up, Alarm, Trip, Date, Time and Cause of Event, voltage and current readings in all phases
Trip Records		Last 5 records with date and time stamping,
Testing	Self-Diagnostic Test	✓
Supplementary Modules	Comunication Module (SR71-COM)	MODBUS RTU using RS 485
	Power Supply Module (UN-PS)	Input : 26V to 60V DC, 90 to 300V AC/DC Output : 24V DC
	Power Metering Module (SR71-PM)	240V AC, 415V AC
	Relay Module (SR71-REL)	4 Relay Outputs (Breaker OPEN, Breaker CLOSE, Pre Trip alarm and MD Exceed)
No. of Storable Settings		2

PROTECTION CHARACTERISTIC

Time-current (DN1)

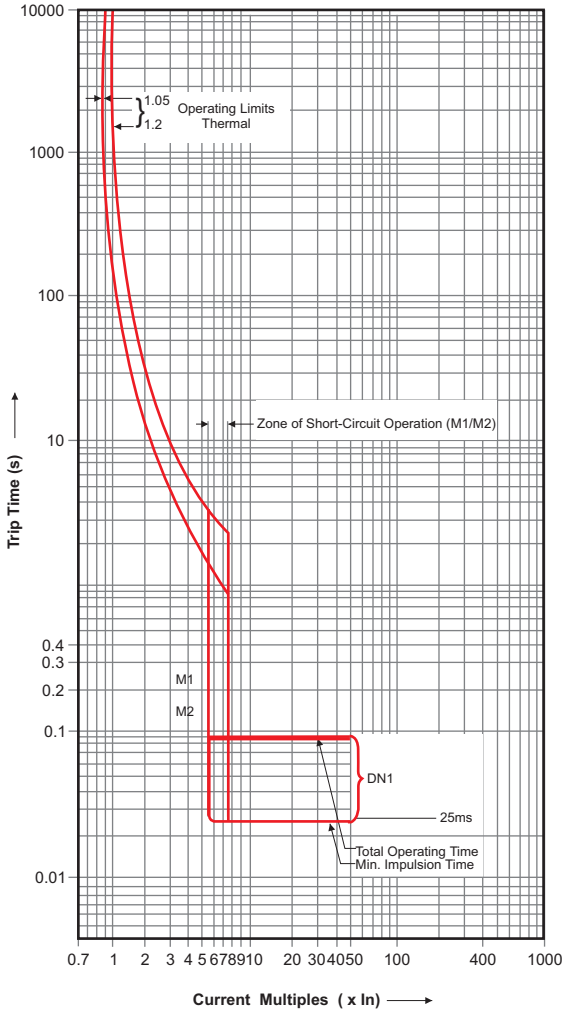

Overload (SR18/18G)

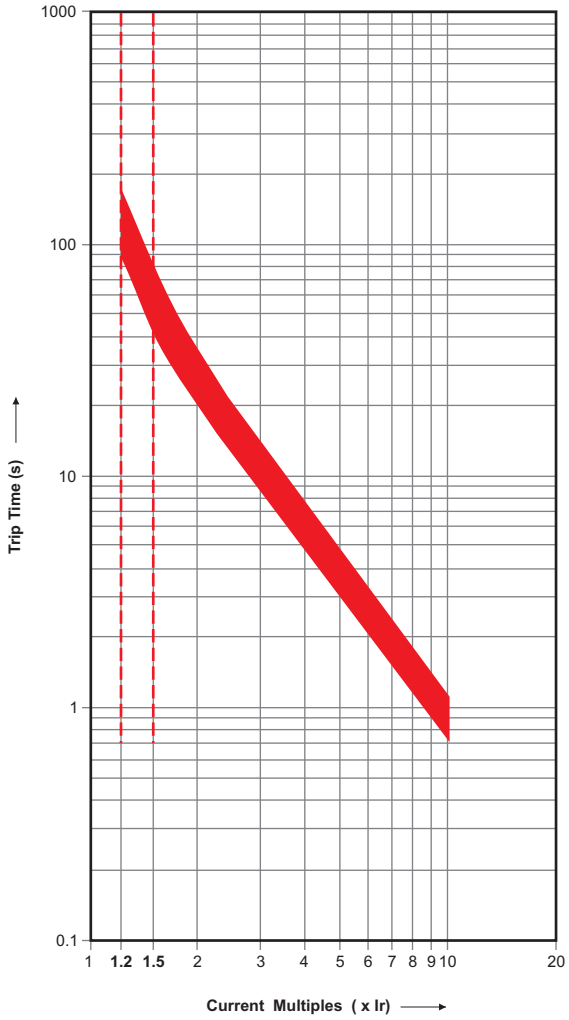

PROTECTION CHARACTERISTIC

Short-Circuit (SR18/18G)

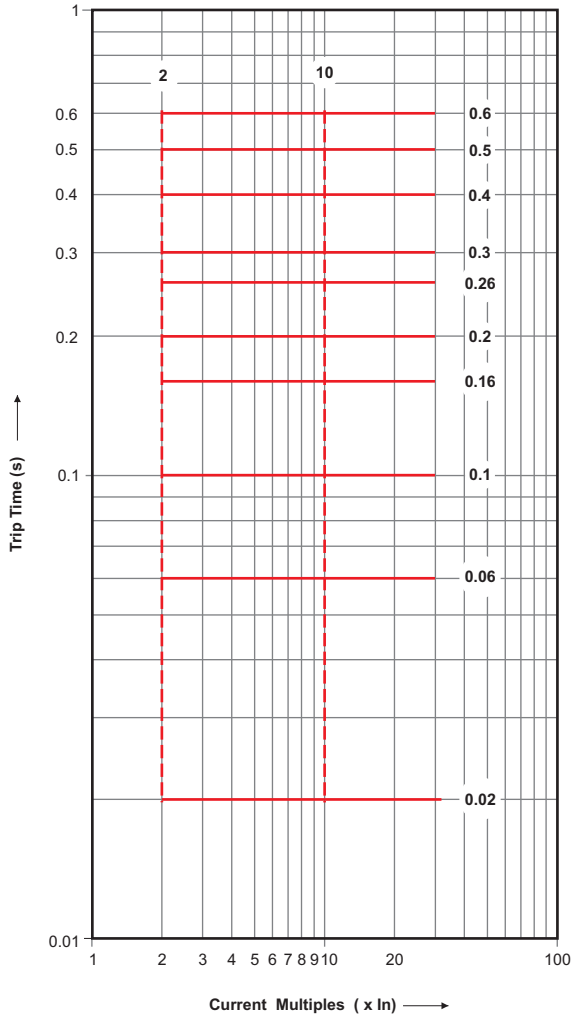

Earth Fault (SR18G)

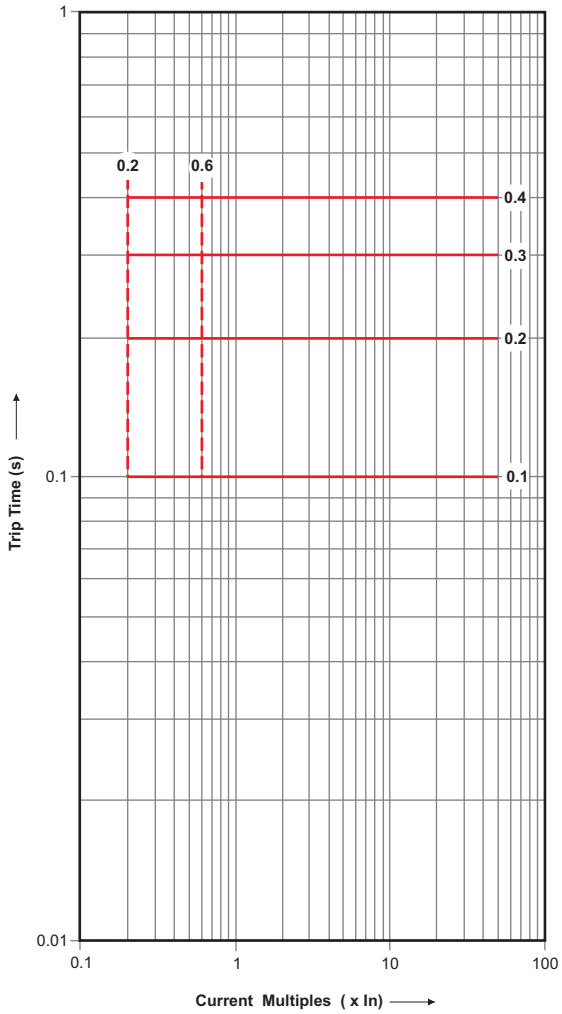

PROTECTION CHARACTERISTIC

Overload (SR18G/SR18Gi with display)

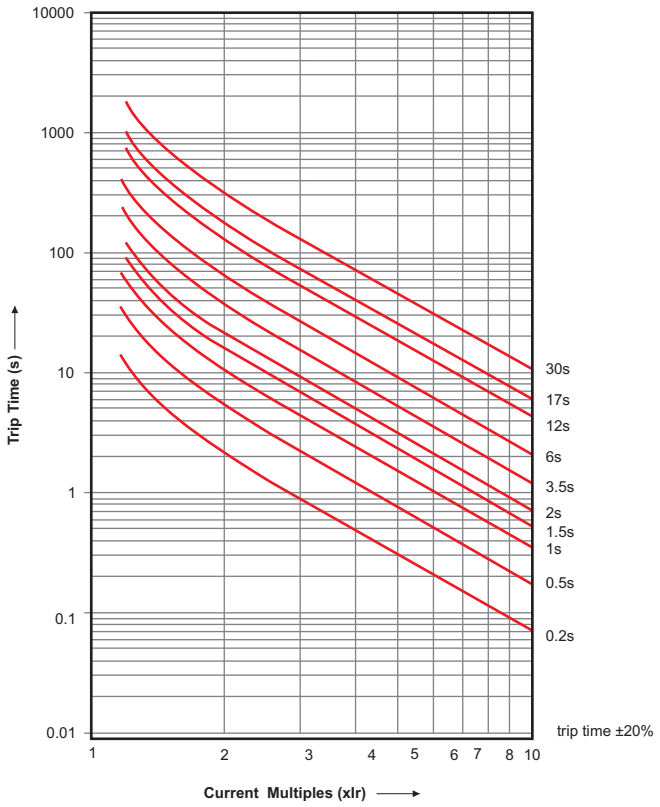

Short-Circuit I^2t ON (SR18G/SR18Gi with display)

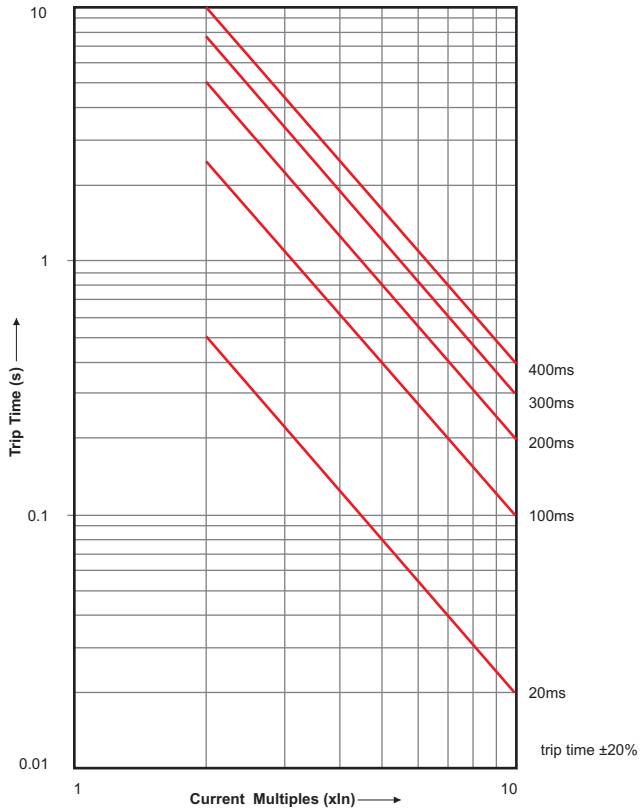

PROTECTION CHARACTERISTIC

Short-Circuit I^2t OFF (SR18G/SR18Gi with display)

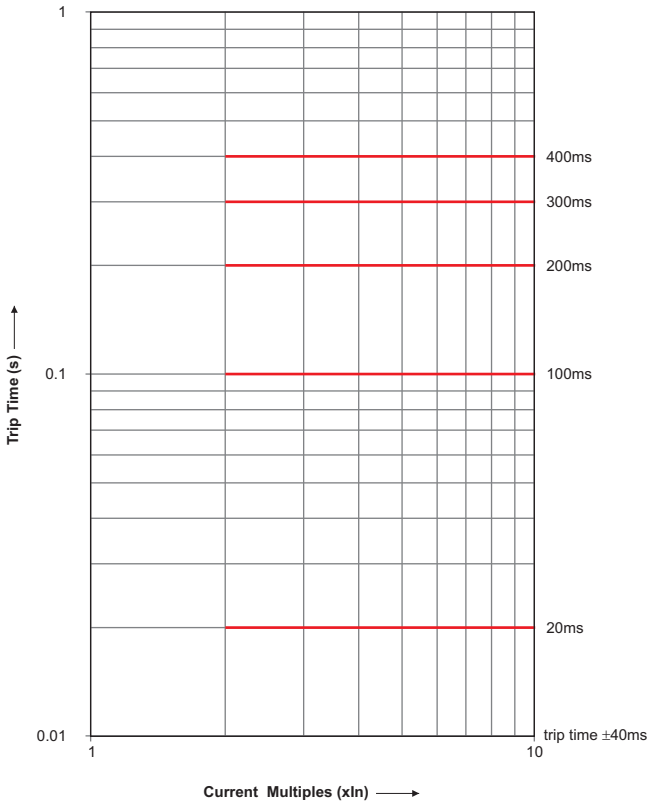

Instantaneous (SR18G/SR18Gi with display)

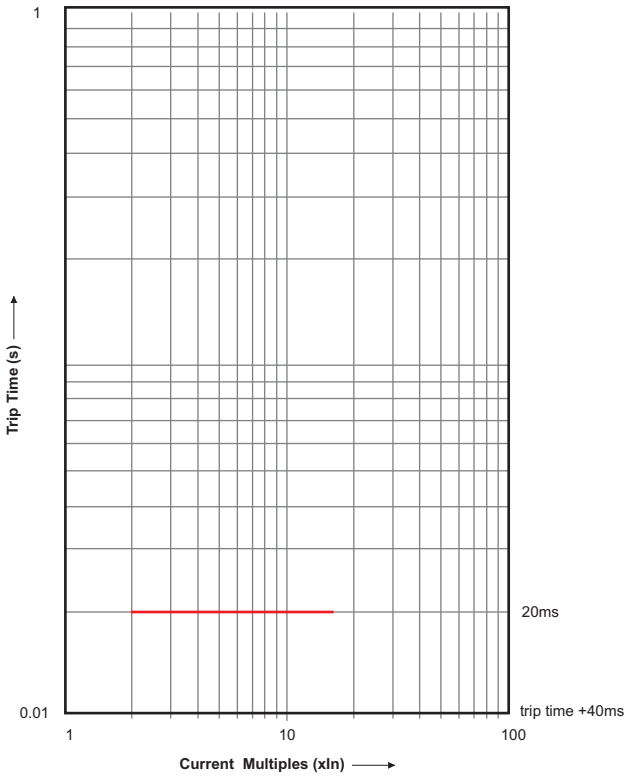

PROTECTION CHARACTERISTIC

Earth Fault I^2t ON (SR18G/SR18Gi with display)

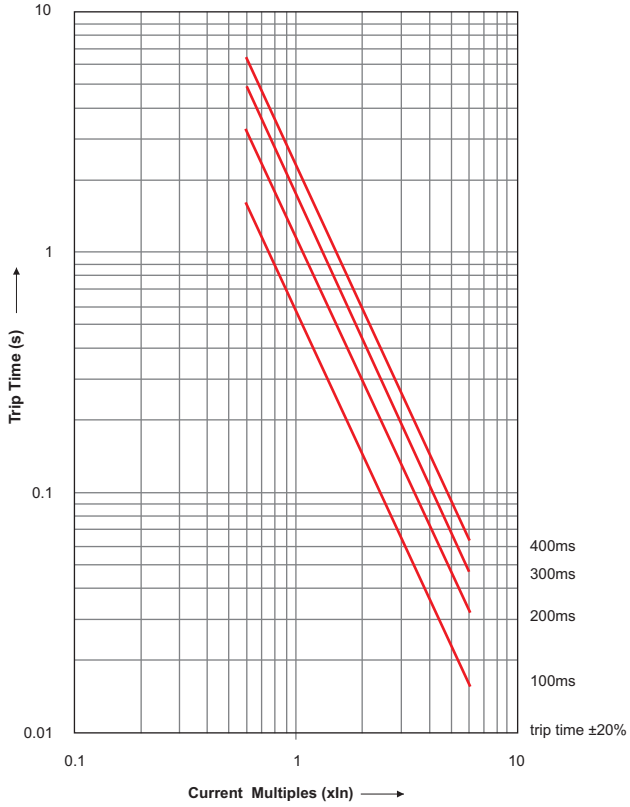

Earth Fault I^2t OFF (SR18G/SR18Gi with display)

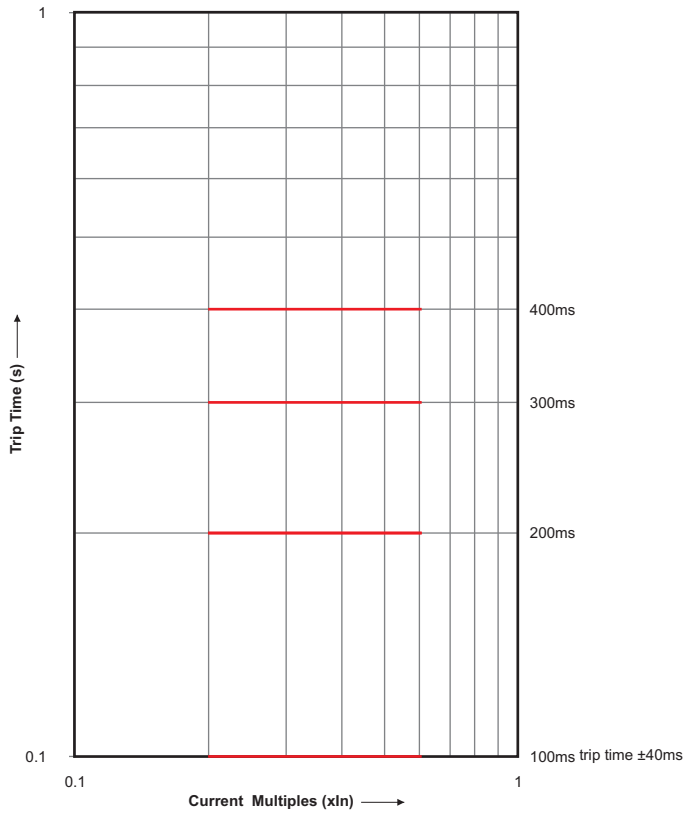

PROTECTION CHARACTERISTIC

Overload (SR21i)

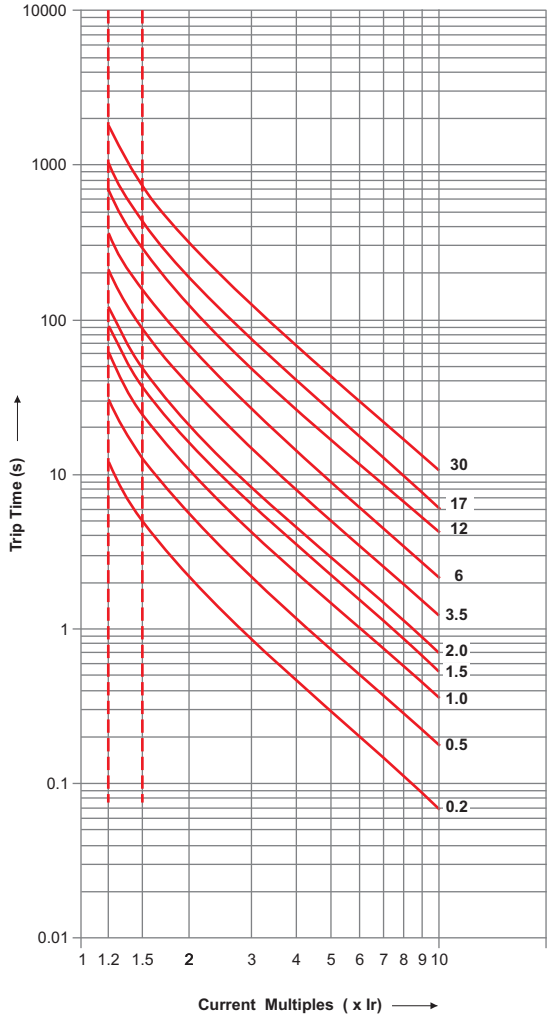

Short-Circuit (SR21i)

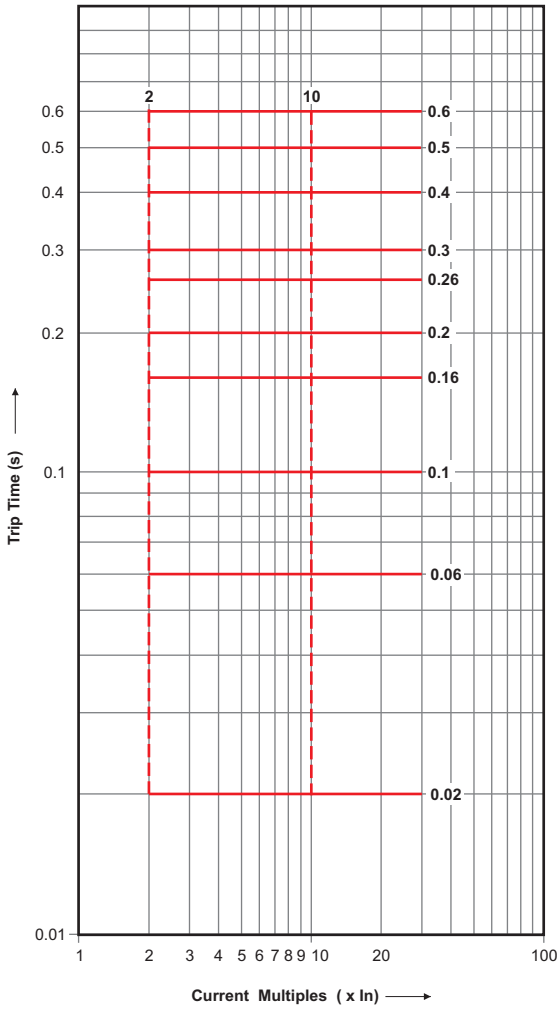

PROTECTION CHARACTERISTIC

Earth Fault (SR21i)

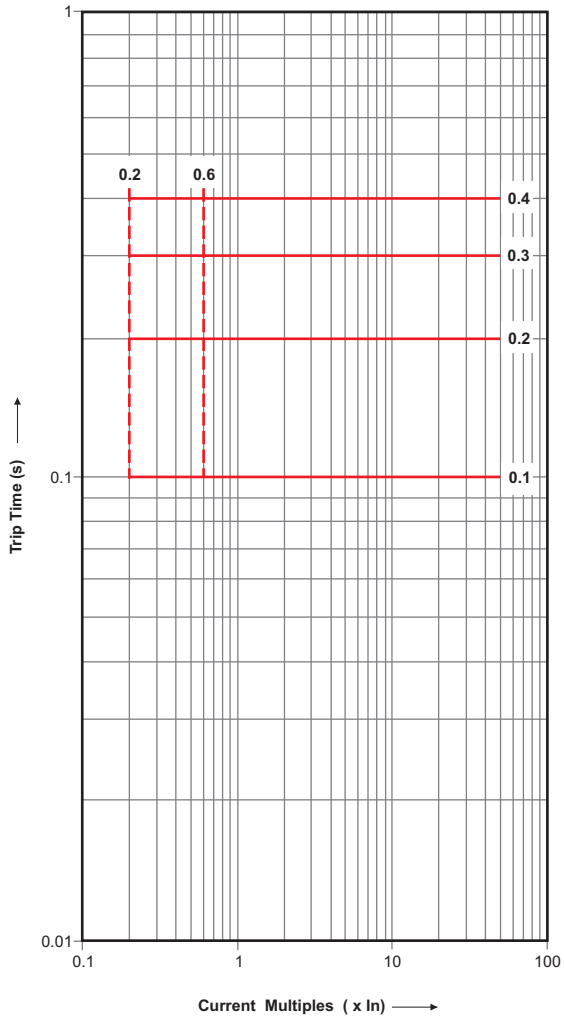

Overload Curve (SR71)

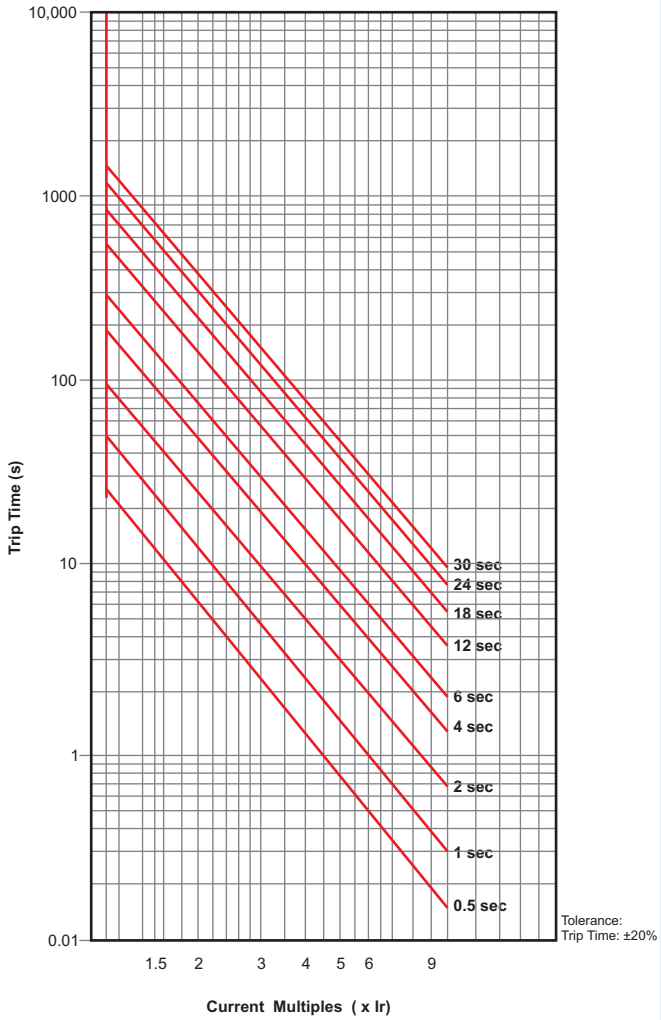

Tolerance:
Trip Time: ±20%

PROTECTION CHARACTERISTIC

Short-Circuit - I^2t ON (SR71)

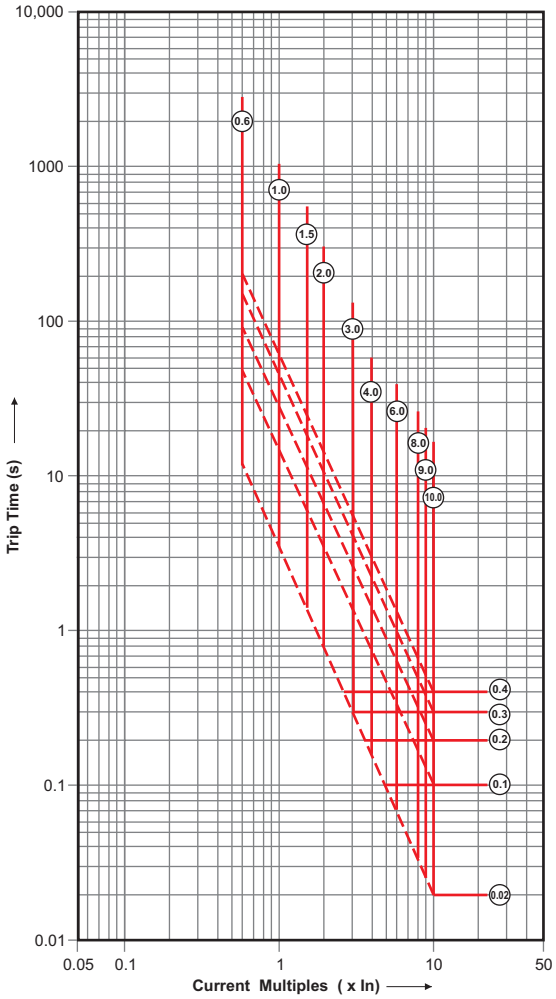

Short-Circuit - I^2t OFF (SR71)

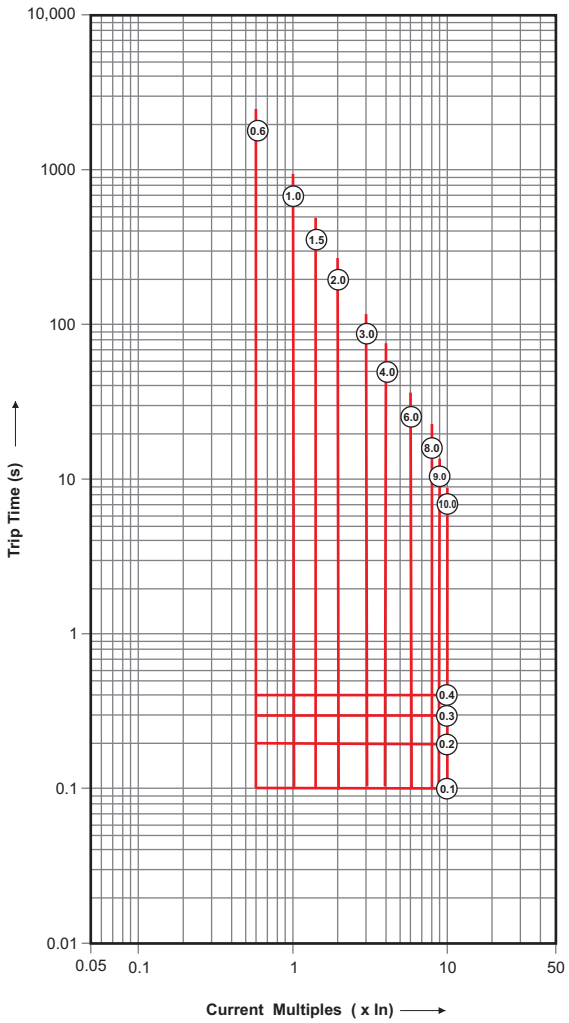

PROTECTION CHARACTERISTIC

Instantaneous (SR71)

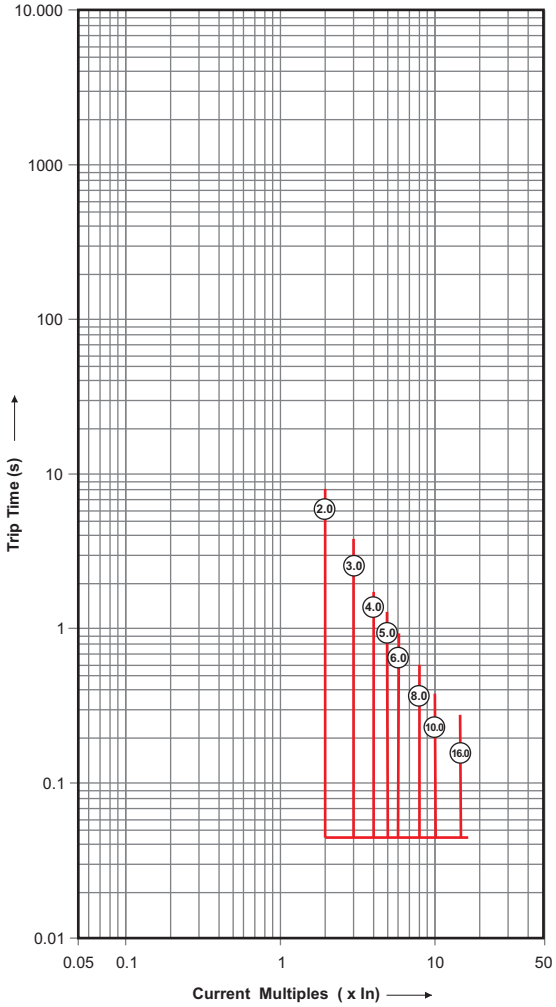

Earth Fault - I^2t ON (SR71)

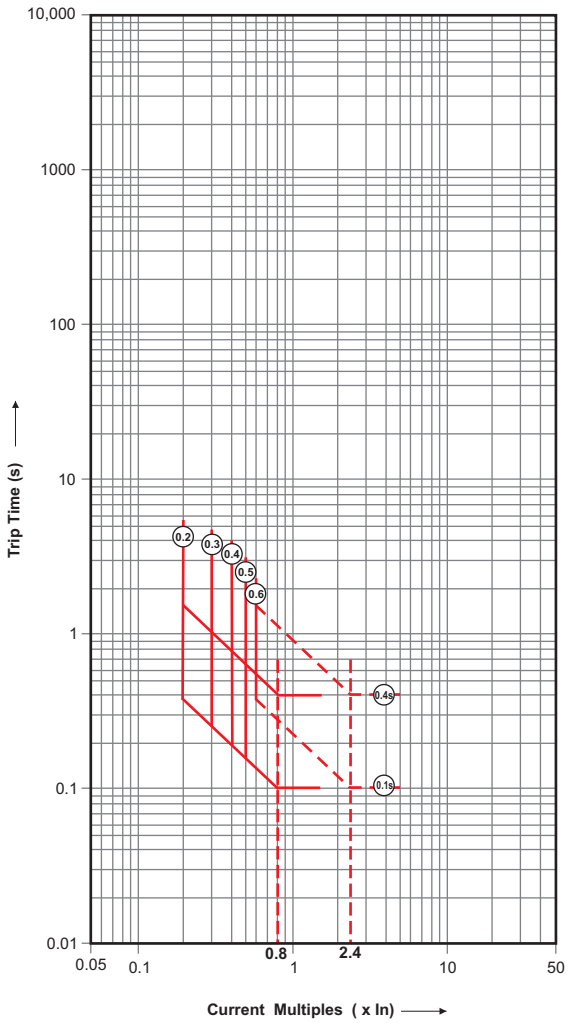

PROTECTION CHARACTERISTIC

Earth Fault - I^2t OFF (SR71)

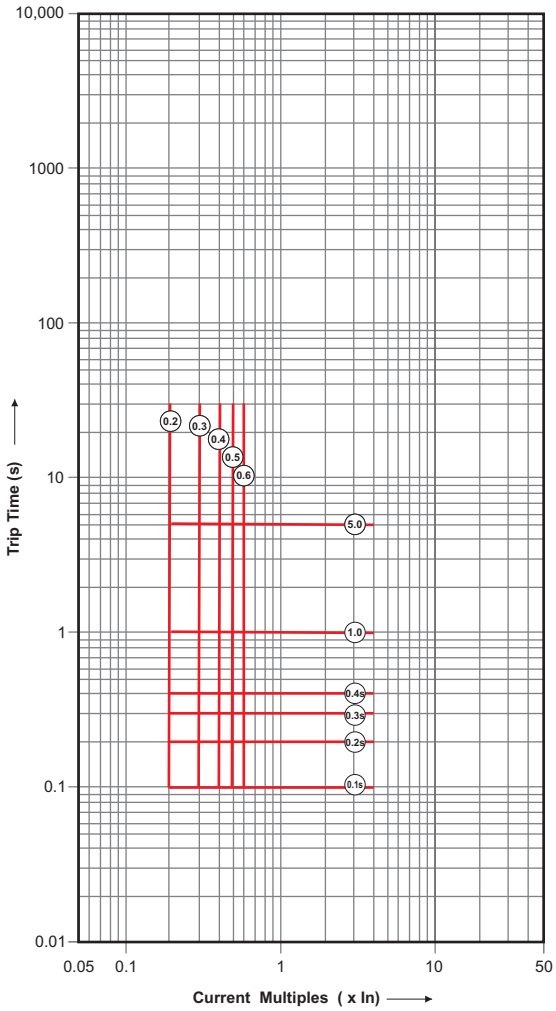

WIRING DIAGRAM

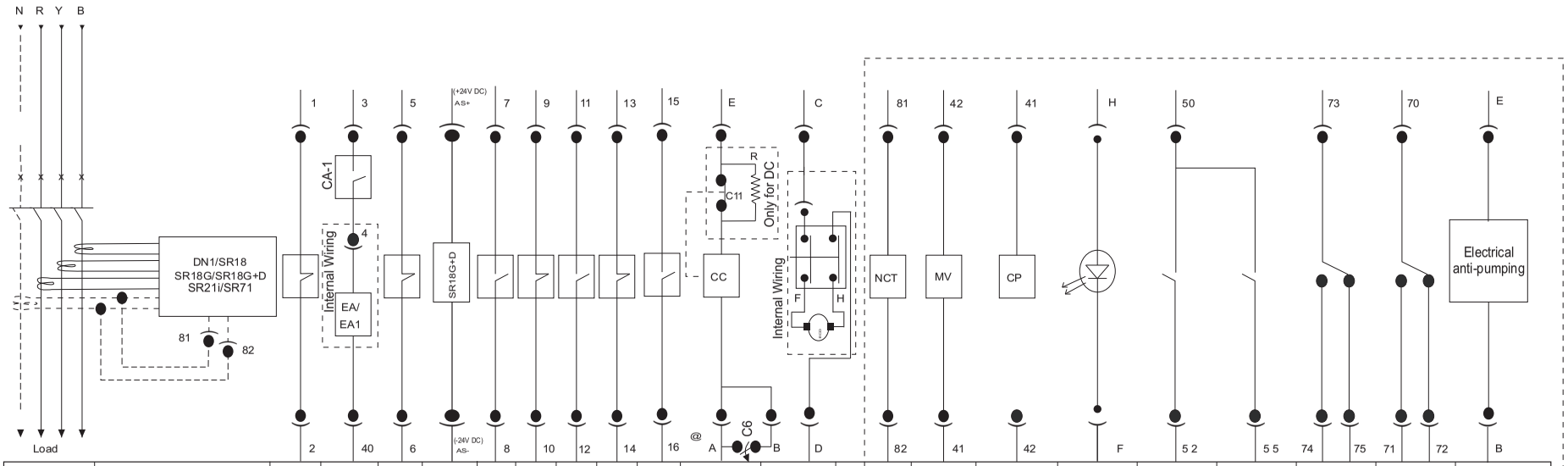

Main Circuit	Protection & Control Unit	Aux NC	Shunt Release	Aux NC	Power Supply For SR18G+D	Aux NO	Aux NC	Aux NO	Aux NC	Aux NO	Closing Coil	Electric Charging Device		Neutral C.T.	U/V Release	Closing Preventer	Spring Charging Indication	Common fault Indication	Separate fault Indication	Shunt trip Indication	Under voltage Indication	Electrical anti-pumping
Ref no.	1	2	3	4	5	6	7	8	9	10	11	12		13	14	15	16	17	18	19	20	21

As per order/requirement

The above drawing is for EDO breakers.

1) For MDO/MF versions
   Ref no. 3, 10, 11 are not applicable
   E, B, C, D, A, 15 are applicable only in electrical breakers.

2) For EF versions
   The ref. no. 12, 13, 14, 15, 16, 17, 18, 19, 20, 21 are provided as per customer requirement.

5. When using An1 Annunciator Module with SR18G/18Gi (with display releases)
   A) AS+ & AS- always appear after 5,6 nos. of the SIC.
   B) If 1,2,3,4,5,6 nos. of SICs are not there, AS+ & AS- will appear first.
   C) SIC 13 and 14 Nos. are not offered in 3P EDO and 3P MDO standard breakers.

FCA Limit switch(Shown in breaker reset condition)
R Economy Resistor
C11 Limit switch operates when closing electromagnet is held on
C6 'Service' position microswitch for withdrawable circuit breakers (shown in 'test' position)

For SR21i release (P&C unit)

SI, SO → i discrimination → Short circuit i/p & o/p
GI, GO → i discrimination → Earth fault i/p & o/p
G → Earth

ACCESSORIES

Type	Data
Lockable Trip Push Button (LTPB) 	Mounted in place of normal trip push button. With this, ACB can be locked in trip condition. For interlocking, LTPBs are offered in the following combinations: • 4 different types of keys i.e. AA, BB, CC and DD suitable for 2 I/C & 1 B/C schemes • Combination of L, M, N, LM and MN locks, which are suitable for 3 I/C & 2 B/C schemes • Combination of K, L, M, N, KL, LM and MN locks, which are suitable for 4 I/C & 3 B/C schemes • Combination of J, K, L, M, N, JK, KL, LM and MN locks, which are suitable for 5 I/C & 4 B/C schemes
View of the Cradle  Door Interlock Racking Interlock Locking in 'Isolated' Position	**Locking in Isolated Position (LIP)** The facility of locking the ACB in Isolated position is available in Drawout ACBs. This is useful to achieve interlocking between Main & Standby source. Similar lock is available as **LOCK IN ANY POSITION.** **Door Interlock** This ensures: • Unless the panel door is closed, breaker cannot be racked in or out • Unless the breaker is in Isolated Position, it is not possible to open the panel door **Racking Interlock** This ensures that breaker cannot be racked in/out unless the ACB is in tripped/open condition.
Mechanical Interlock 	It is possible to provide 'Mechanical Interlock' between two breakers of the same or different ratings in vertical or horizontal configurations. Mechanical interlock is available for ACBs up to 4000A. Mechanical interlocking for ACBs in vertical configuration can be provided by links or by flexible cables. Same for horizontal configuration can be provided by flexible cables.

ACCESSORIES

Type	Data
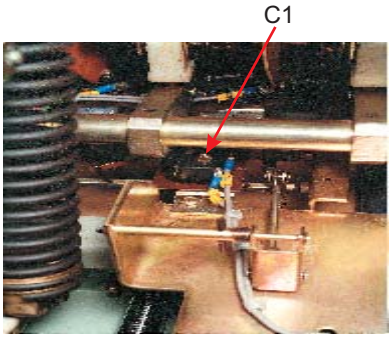	**Common indication of tripping due to overload, short-circuit and earth faults.** • Provided by micro-switch C1 fitted inside the ACB • Available as an option in all releases
	**Separate indication of tripping due to overload, short-circuit and earth faults.** • For release type DN1, this is provided by micro-switch C1 & C2 (C2 fitted inside release)
AN1-Annunciator Module 	**Remote indication of tripping due to overload, short-circuit and earth faults.** • Can be used with releases type SR18/SR18G/SR21i/SR18G & SR18Gi with display • Individual fault indication provided by three separate LEDs for - Long time faults - Short time fault/instantaneous fault - Earth fault - One potential free contact rated 5A at 230V AC available for each type of fault • Flush mounting on panel (H-W-D=92mm x 46mm x 105mm) • Operating voltage: 240V AC
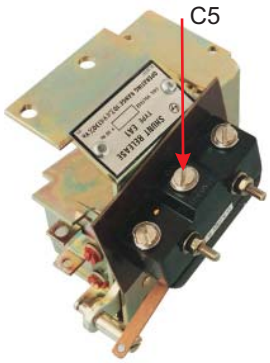	**Indication for operation of shunt release or undervoltage release.** • Provided by micro-switch C5 fitted on the shunt release or undervoltage release

ACCESSORIES

Type	Data	Technical Data

Shunt Release

- For remote tripping of the breaker
- Shunt release coil is short time rated and is disconnected from the circuit by an auxiliary contact when the ACB trips (Refer to wiring diagram)
- Low power consumption
- Two types available:
  - EA for DC application
  - EA1 for AC application

Type of Release	Rated Operational voltage (Ue)	Power consum-ption at pick-up	Operation Limit
EA1	240 AC 415 AC	800 VA 800 VA	10-130% Ue
EA	24V DC 48V DC 110 DC 220 DC	32 W 125 W 45 W 30 W	65-130% Ue

Note : Other voltages available on request

Undervoltage Release

- **Type MV** With no intentional time delay

Notes: When undervoltage release is provided, the ACB can be closed only when supply is available to the undervoltage release.

Parameter	Specification
Rated Operational voltage (Ue)	240V & 415V: 50Hz 220V & 415V: 60Hz
Pick-up (V)	80% Ue
Drop OFF (V)	35-65% Ue
Consumption (VA)	Pick-up - 23 VA Hold on - 10 VA
Watt loss	6 W

Closing Release

Closing release remotely closes the circuit breaker if the mechanism spring is already charged.

Rated operational voltage (Ue)	Power consumption		Range of operation
	Pick-up	Hold-up	
110V AC 240V AC 220V AC	320 VA	50 VA	85-110% Ue
110V DC 220V DC	300 W	50 W	
24V DC	350 W	50 W	

Spring charging Motor

Electrical charging device automatically charges the mechanism spring of the circuit-breaker. After circuit-breaker closing, the geared motor immediately recharges the closing spring. Thus instantaneous reclosing of the circuit-breaker is possible following opening operation.

Rated operational voltage (Ue)	Power consumption	Range of operation
240V AC	320 VA	85-110% Ue
110V DC 220V DC	154 W	

Auxiliary Contacts

Two combinations available:
- 2 NO + 2 NC
- 6 NO + 6 NC

Electrical circuit	Voltage (V)	Rated current (A)
Resistive	24 to 415 AC 250V AC	16 1.2
Non-resistive	24 to 415 AC 250V AC	16 1.0 #

L/R = 15 ms with two contacts in series

OVERALL DIMENSIONS

Fixed Breakers

For 800A to 2500A 3P/4P C/H & 400A to 1600A 3P/4P S1

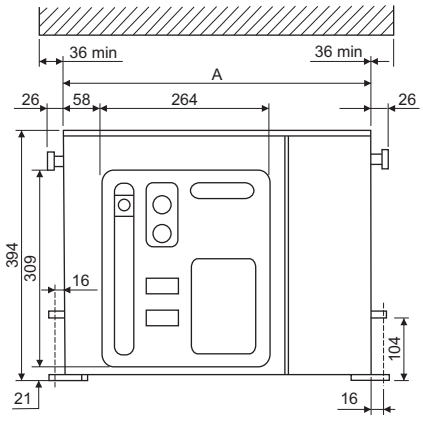

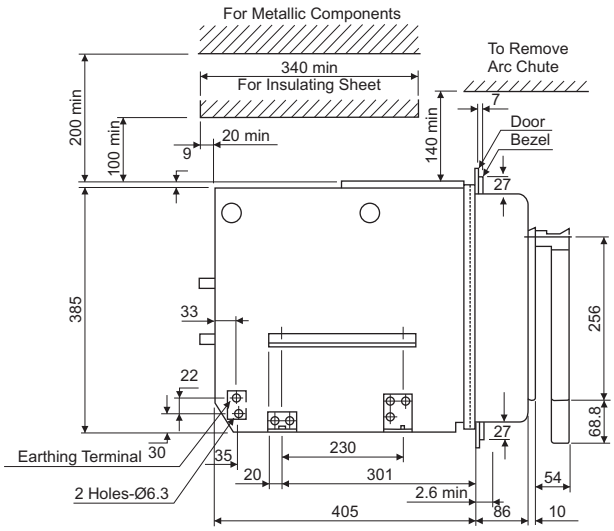

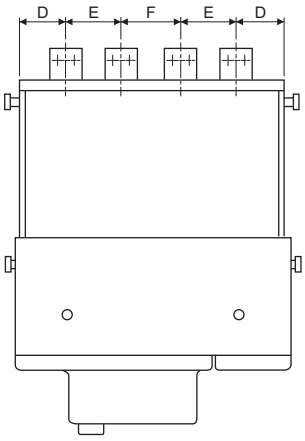

Ratings CN - CS			Dimensions (mm)			
			A	D	E	F
400/630A	S1	3P	326	57	102	-
800/1000A	C/H/S1	3P				
1250/1600A	C/H/S1	3P				
400/630A	S1	4P	414	56	98	98
800/1000A	C/H/S1	4P				
1250/1600A	C/H/S1	4P				
2000/2500A	C/H	3P	482	83	154	-
2000/2500A	C/H	4P	628	82	150	156

For CN-CS...E 400A-2000A 3P

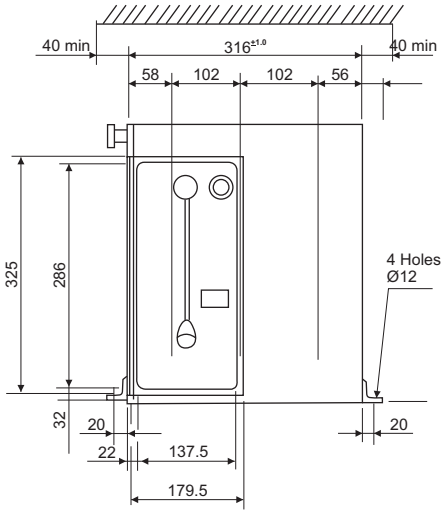

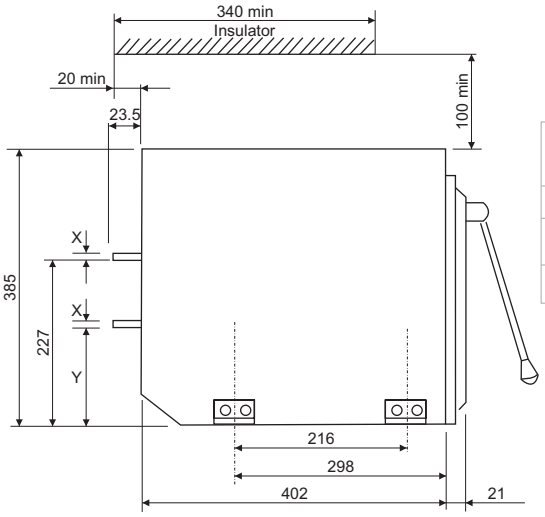

Rating Type	X	Y
400E -1250E	5	150
1600E	10	145
2000E	15	140

 Note : All Dimensions are in mm.

OVERALL DIMENSIONS

Fixed Breakers

Terminal

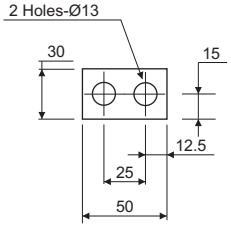

400 to 2000E, 800/1000/1250/1600C/H & 400/630/800/1000/1250/1600S1

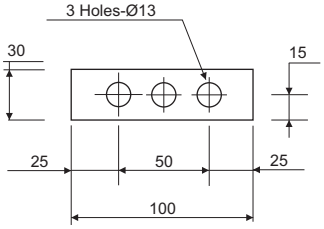

2000/2500C/H

Terminal Connections

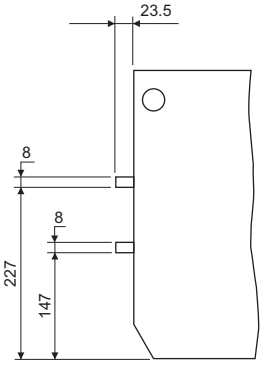

Terminal for 400/630/800 S1

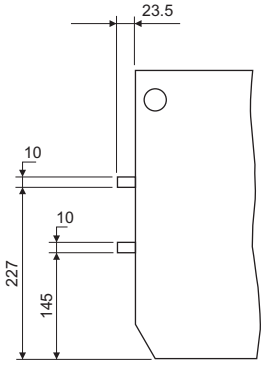

1000/1250 S1 & 800/1000 C

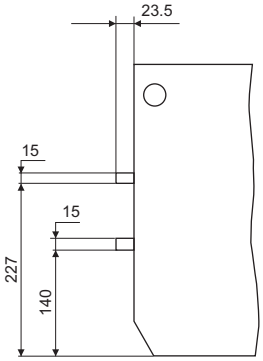

1600 S1 & 800/1000 H 1250/1600/2000/2500 C/H

Bezel Fixing Plan for all Fixed Breakers

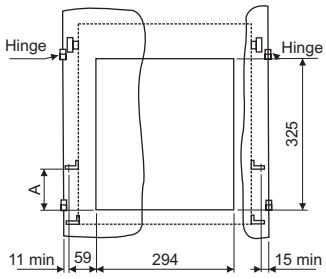

Door Cutout

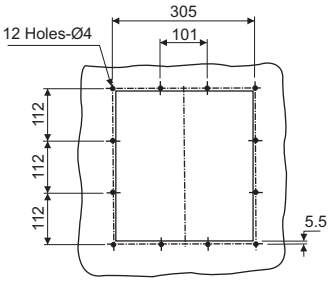

Door Drilling for Bezel Fixing Plan

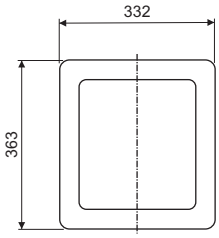

Bezel

Note:
A = 89 for 4000C/3200D
A = 91 for other fixed ACBs

Note : All Dimensions are in mm.

OVERALL DIMENSIONS

Drawout Breakers

For 800A to 2500A C/H, 3200A H2/H1, 4000A H2/H, 400A to 3200A S1 3P/4P

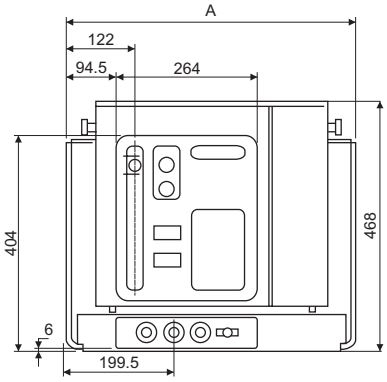

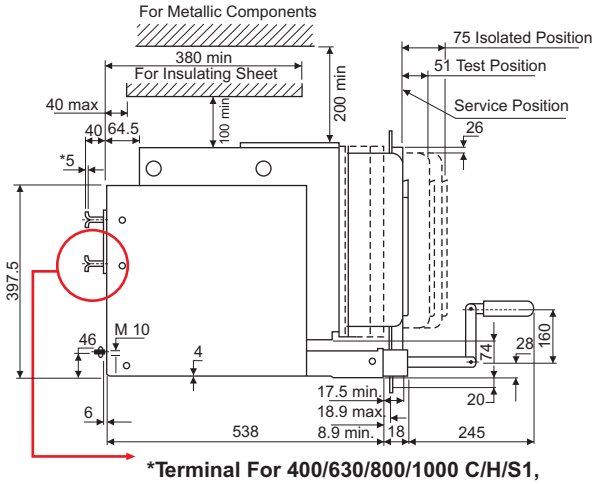

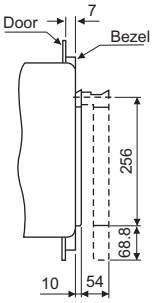

***Terminal For 400/630/800/1000 C/H/S1, 1250/2500S1 & 2000C/H**

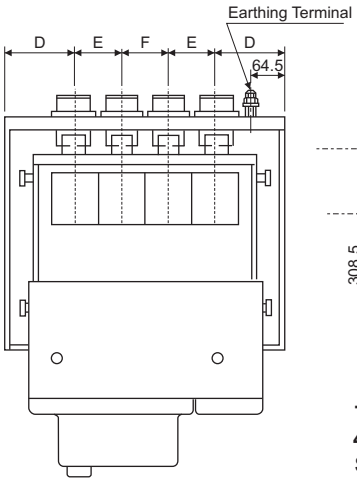

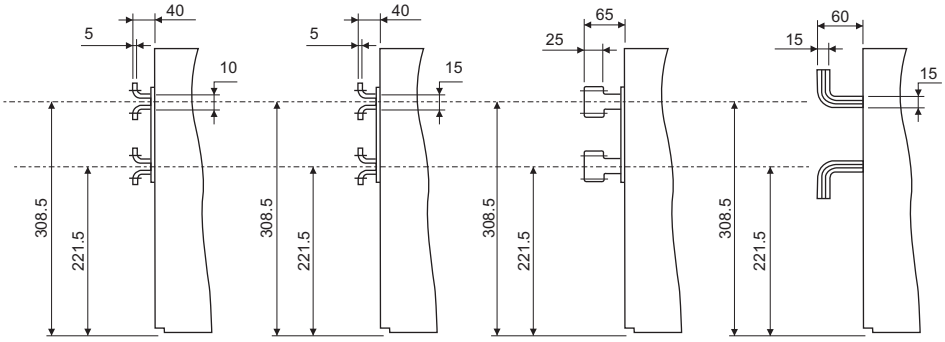

Terminal for 400/630/800/1000/1250 S1 & 800/1000C, 2000C, 2500S1

Terminal for 1250/1600/2500C/H & 800/1000/200H, 1600/2000S1

Terminal for for 3200S1

Terminal for 3200H2/H1 & 4000H2/H

Ratings CN - CS			Dimensions (mm)			
			A	D	E	F
400/630/800/1000A	C/H/S1	3P	399	97.5	102	-
2000A	S1	3P				
1250/1600A	C/H/S1	3P				
400/630/800/1000A	C/H/S1	4P	487	96.5	98	98
2000A	S1	4P				
1250/1600A	C/H/S1	4P				
2000/2500A	C/H	3P	555	123.5	154	-
2500/3200A	S1	3P				
2000/2500A	C/H	4P	701	122.5	150	156
2500/3200A	S1	4P				
3200A	H2/H1	3P	701	148.5	202	-
4000A	H2/H	3P				
3200A	H2/H1	4P	909	151.5	202	202
4000A	H2/H	4P				

 Note : All Dimensions are in mm.

OVERALL DIMENSIONS

Drawout Breakers

Flat Terminal Connections

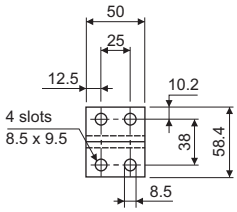

800 - 1000C & 400 - 1250S1

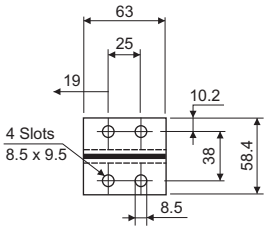

800 - 1000H, 1250/1600C/H & 1600 - 2000S1

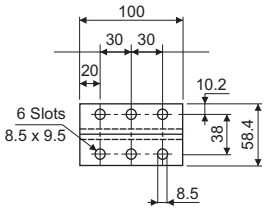

2000C

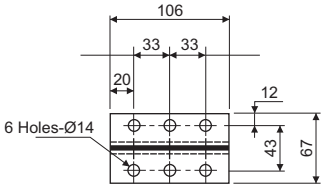

2500C/H & 2000H

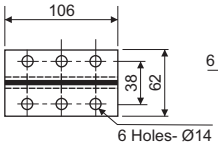

2500S1

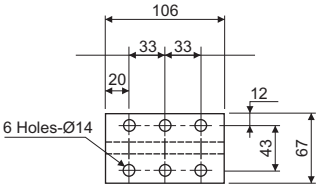

3200S1

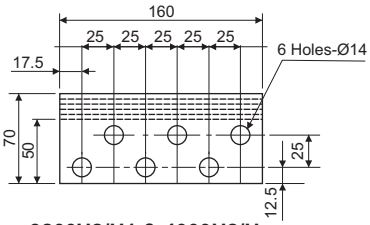

3200H2/H1 & 4000H2/H

For 4000/5000/6300C 3P/4P

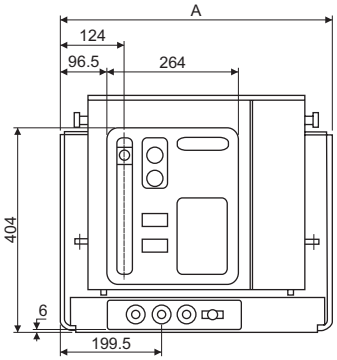

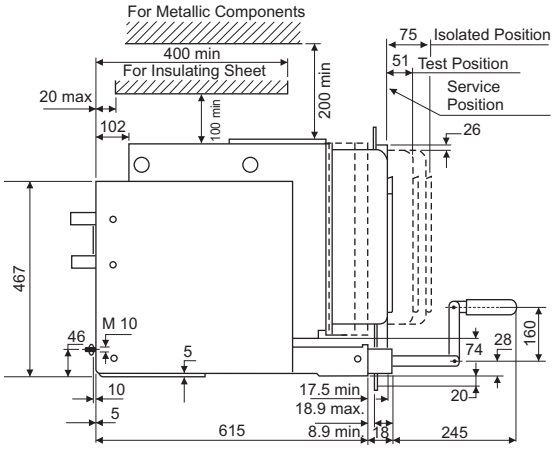

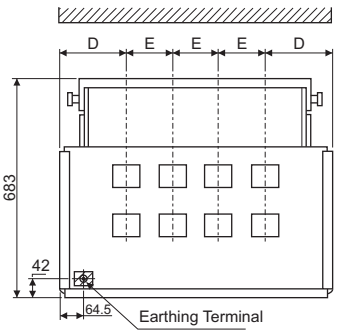

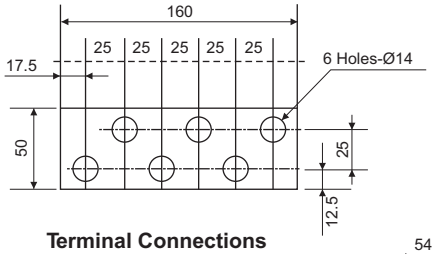

Terminal Connections 4000C

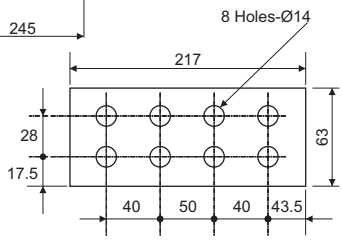

Terminal Connections 5000C/6300C

Ratings		Dimensions (mm)		
		A	D	E
4000C	3P	711	155.5	200
4000C	4P	913	156.5	200
5000A/6300A	3P	913	187.5	269
5000A/6300A	4P	1182	187.5	269

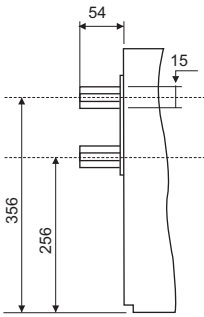

Terminal for 4000A C

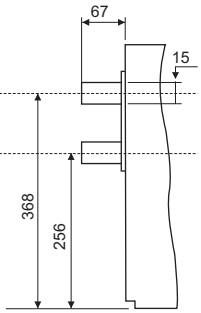

Terminal for 5000/6300A C

Note : All Dimensions are in mm.

OVERALL DIMENSIONS

Mounting Details

For Horizontal Mounting of all Draw-out Breakers

For 400A to 3200A C/H/ S1 3P/4P 3200 H2/H1, 4000 H2/H 3P/4P

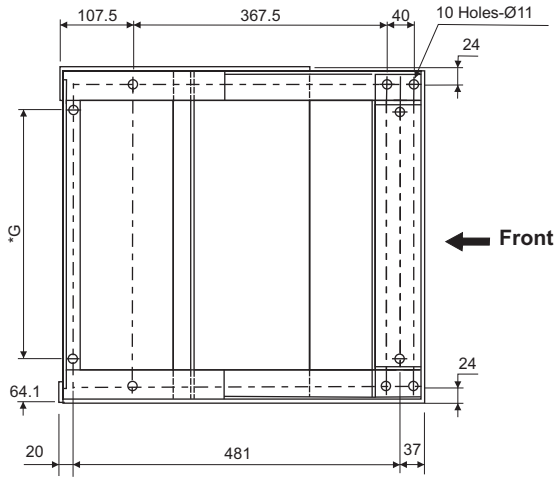

Ratings		Type	G (mm)
800A - 1600A	3P	C/H	280.3
400A - 2000A	3P	S1	280.3
800A - 1600A	4P	C/H	368.3
400A - 2000A	4P	S1	368.3
2000/2500A	3P	C/H	436.3
2000/2500A	4P	C/H	582.3
2500/3200A	3P	S1	436.3
2500/3200A	4P	S1	582.3
3200A	3P	H2/H1	582.3
3200A	4P	H2/H1	790.3
4000A	3P	H2/H	582.3
4000A	4P	H2/H	790.3
5000/6300A	3P	C	863
5000/6300A	4P	C	1132

For 3200D/4000C/5000C/6300C 3P/4P

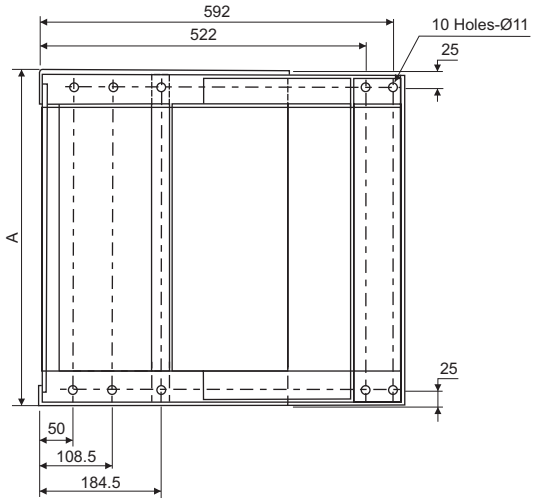

Ratings CN-CS	Dimensions
	A
3200D/4000C	711
3200D/4000C	913
5000C/6300C	913
5000C/6300C	1182

Bezel Fixing Plan for all Draw-out Breakers

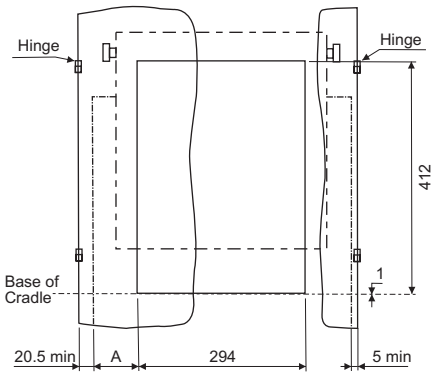

Door Cutout

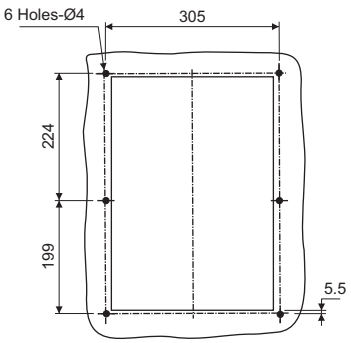

Door Drilling for Bezel Fixing Plan

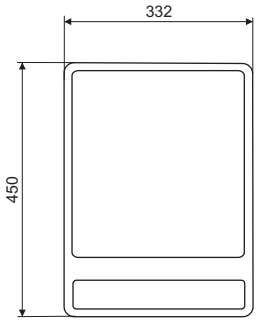

Bezel

Note: For 4000A C 3P/4P, 5000C/6300C 3P/4P ACB, A = 81.5
For other Drawout Breakers A = 79.5

 Note : All Dimensions are in mm.

OVERALL DIMENSIONS

Terminals

Horizontal Terminals

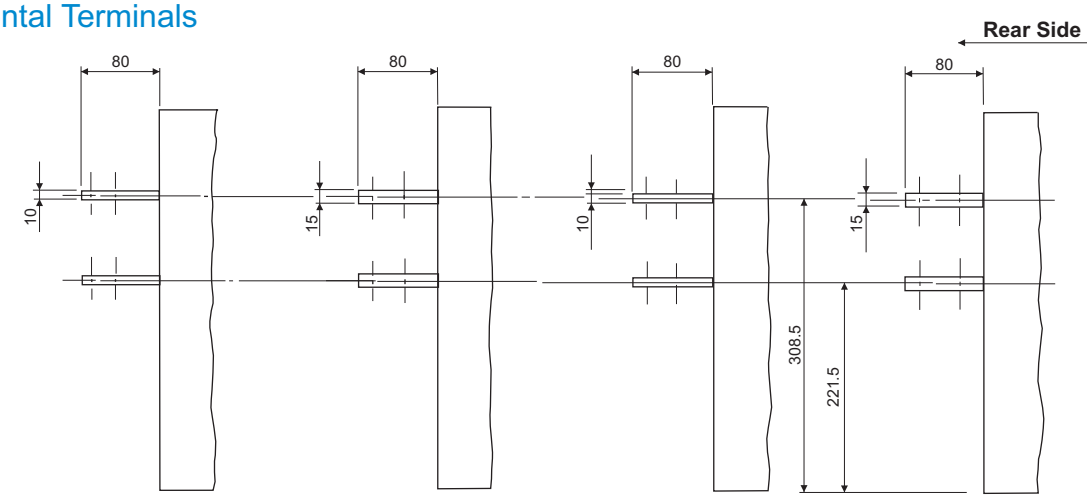

800 - 1000C | **1250 - 1600C/H & 800/1000H** | **2000C** | **2500C/H & 2000H**

Vertical Terminals

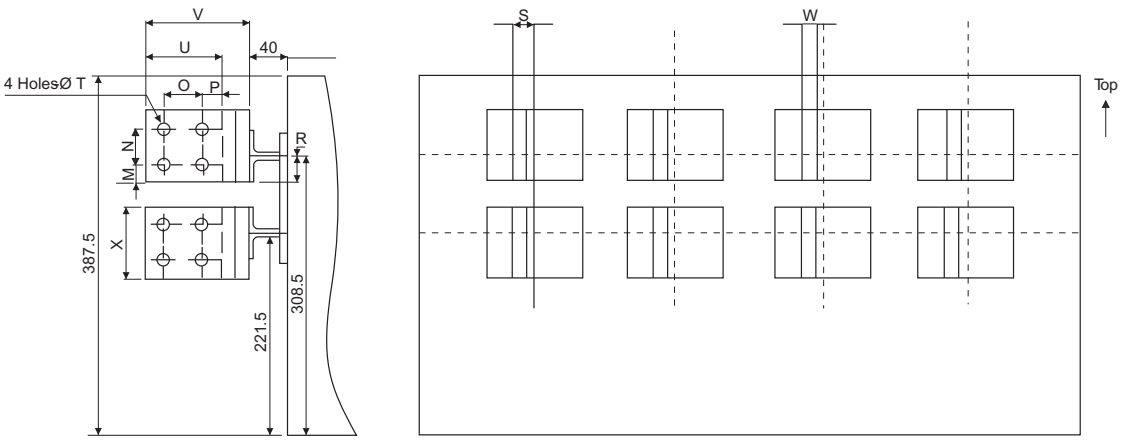

Side View | **Rear View**

Ratings	M	N	P	Q	R	S	T	U	V	W	X
400-1250 S1 & 800-1000 C	10.2	38	20	25	29.2	5	9	65	95	10	58.4
1600-2000 S1 & 1250-1600 C/H 800-1000 H	20	40	20	25	29.2	5	9	65	95	10	80
2000 C	20	40	20	40	29.2	22.5	14	80	110	15	80
2500 S1/ C/H 2000 H	20	40	20	40	33.5	7.5	14	80	110	15	80
3200 S1	30	60	20	40	33.5	7.5	14	105	100	15	120

Note : 1) All Dimensions are in mm. 2) Consult us for other Terminal Orientations.

OVERALL DIMENSIONS

Terminals

Vertical Terminals 3200 H2/H1, 4000 H2/H

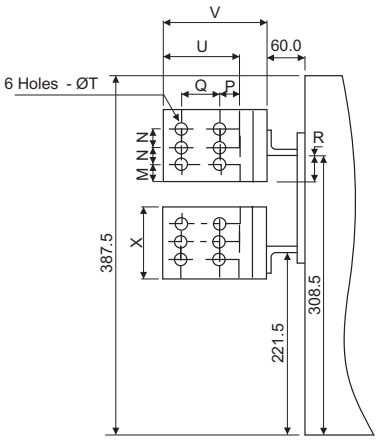

Side View

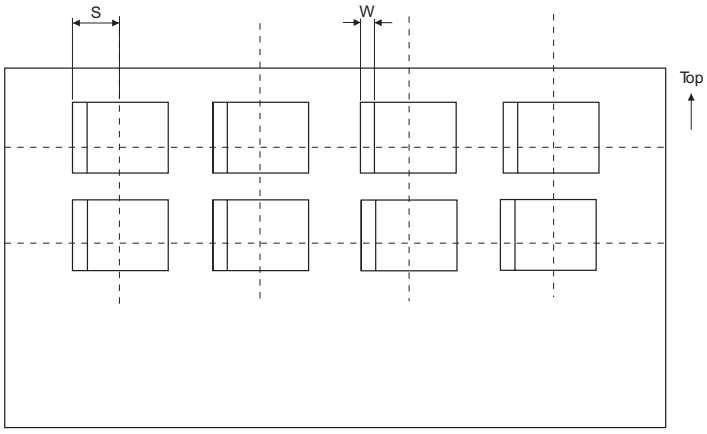

Rear View

The dimensions for 3200 H2/H1 and 4000 H2/H are as under:

Ratings	M	N	P	Q	R	S	T	U	V	W	X
3200 H2/H1, 4000A H2/H	30	50	45	40	29.5	95	14	80	140	15	160

Note : 1) All Dimensions are in mm. 2) Consult us for other Terminal.

Get the Switchgear Training Edge!

Aimed at maximizing productivity, conserving energy, minimizing costs and enhancing safety, our Electrical & Automation training programmes have benefitted over 1.15 Lakh professionals in the last 27 years. These training programmes are highly beneficial as they provide right exposure and impart knowledge on selection, installation, maintenance and testing of Electrical & Automation products.

So gain the advantage and go the extra mile with:

- 14 courses on contemporary topics
- Courses applicable to all switchgear brands
- Training Centers in Pune, Lucknow, Coonoor, Vadodara, Delhi & Kolkata
- Blend of theory and practical experience

The typical training programmes cover:

- Low Voltage & Medium Voltage Switchgear
- Switchboard Electrical Design
- AC Drives & Building Management Solutions
- Protective Relays, Earthing & Harmonics
- Energy Conservation & Management

Please contact any of the training centres for participation and detailed training programme schedule.

Pune
Larsen & Toubro Limited
Switchgear Training Centre
T-156/157, MIDC, Bhosari,
Pune: 411 026.
Tel: (020) 2712 0037 / 2712 0653
Fax: (020) 2712 2933
E-mail : STC-PUNE@LNTEBG.COM

Lucknow
Larsen & Toubro Limited
Switchgear Training Centre
C-6&7, UPSIDE, P.O. Sarojini Nagar,
Lucknow: 226 008.
Tel: (0522) 247 6110 / 099355 63239
Fax: (0522) 247 6015
E-mail : STC-LUCKNOW@LNTEBG.COM

Delhi
Larsen & Toubro Limited
Switchgear Training Centre
32, Shivaji Marg, Near Moti Nagar Metro Station
P.O. Box 6223, New Delhi: 110015.
Tel: +91 011 41419515 / 41419516 / 41419500
Fax: +91 011 41419600
E-mail: STC-DELHI@LNTEBG.COM

Coonoor
Larsen & Toubro Limited
Switchgear Training Centre Ooty-Coonoor
Main Road, Yellanahalli
P.O., The Nilgiris - 643 243.
Tel: (0423) 251 7107
Fax: (0423) 251 7158
E-mail : STC-COONOOR@LNTEBG.COM

Vadodara
Larsen & Toubro Limited
Switchgear Training Centre
Behind L&T Knowledge City,
Near Village Ankhol,
Vadodara - 390 019.
Tel: +91 265 245 7805
E-mail : STC-VADODARA@LNTEBG.COM

Kolkata
Larsen & Toubro Limited
Switchgear Training Centre
4th Floor, 3-B, Shakespeare Sarani,
Kolkata: 700071
Tel: +91 033 44002151
E-mail: STC-KOLKATA@LNTEBG.COM

Electrical Standard Products (ESP) Branch Offices:

REGISTERED OFFICE AND HEAD OFFICE
L&T House, Ballard Estate
P. O. Box 278
Mumbai 400 001
Tel: 022-67525656
Fax: 022-67525858
Website: www.Larsentoubro.com

ELECTRICAL STANDARD PRODUCTS (ESP)
501, Sakar Complex I
Opp. Gandhigram Rly. Station
Ashram Road
Ahmedabad 380 009
Tel: 079-66304006-11
Fax: 079-66304025
e-mail: esp-ahm@LNTEBG.com

38, Cubbon Road, P. O. Box 5098
Bangalore 560 001
Tel: 080-25020100 / 25020324
Fax: 080-25580525
e-mail: esp-blr@LNTEBG.com

131/1, Zone II
Maharana Pratap Nagar
Bhopal 462 011
Tel: 0755-3080511 / 05 / 08 / 13 / 17 / 19
Fax: 0755-3080502
e-mail: esp-bho@LNTEBG.com

Plot No. 559, Annapurna Complex
Lewis Road
Bhubaneswar 751 014
Tel: 0674-6451342, 2436690, 2436696
Fax: 0674-2537309
e-mail: nayakd@LNTEBG.com

SCO 32, Sector 26-D
Madhya Marg, P. O. Box 14
Chandigarh 160 019
Tel: 0172-4646840, 4646853
Fax: 0172-4646802
e-mail: esp-chd@LNTEBG.com

L&T Construction Campus
TC-1 Building, II Floor
Mount-Poonamallee Road
Manapakkam
Chennai 600 089
Tel: 044-2270 6800
Fax: 044-22706940
e-mail: esp-maa1@LNTEBG.com

67, Appuswamy Road
Post Bag 7156
Opp. Nirmala College
Coimbatore 641 045
Tel: 0422-2588120 / 1 / 5
Fax: 0422-2588148
e-mail: esp-cbe@LNTEBG.com

Khairasol, Degaul Avenue
Durgapur 713 212
Tel: 2559848, 2559849, 2559844
Fax: 0343-2553614
e-mail: esp-dgp@LNTEBG.com

5, Milanpur Road, Bamuni Maidan
Guwahati 781 021
Tel: +91 8876554410 / 8876554417
Fax: 361-2551308
e-mail: hazrasudipto@LNTEBG.com

II Floor, Vasantha Chambers
5-10-173, Fateh Maidan Road
Hyderabad 500 004
Tel: 040-67015052
Fax: 040-23296468
e-mail: esp-hyd@LNTEBG.com

Monarch Building, 1st Floor
D-236 & 237, Amrapali Marg
Vaishali Nagar
Jaipur 302 021
Tel: 0141-4385914 to 18
Fax: 0141-4385925
e-mail: esp-jai@LNTEBG.com

Akashdeep Plaza, 2nd Floor
P. O. Golmuri
Jamshedpur 831 003
Jharkhand
Tel: 0657-2312205 / 38
Fax: 0657-2341250
e-mail: esp-jam@LNTEBG.com

Skybright Bldg; M. G. Road
Ravipuram Junction, Ernakulam
Kochi 682 016
Tel: 0484-4409420 / 4 / 5 / 7
Fax: 0484-4409426
e-mail: esp-cok@LNTEBG.com

3-B, Shakespeare Sarani
Kolkata 700 071
Tel: 033-44002572 / 3 / 4
Fax: 033-22821025 / 7587
e-mail: esp-ccu@LNTEBG.com

A28, Indira Nagar, Faizabad Road
Lucknow 226 016
Tel: 0522-4929905 / 04
Fax: 0522-2311671
e-mail: esp-Lko@LNTEBG.com

No: 73, Karpaga Nagar, 8th Street
K. Pudur
Madurai 625 007
Tel: 0452-2537404, 2521068
Fax: 0452-2537552
e-mail: esp-mdu@LNTEBG.com

EBG North Wing Office-Level 2
Gate 7, Powai Campus
Mumbai 400 072
Tel: 022-67052874 / 2737 / 1156
Fax: 022-67051112
e-mail: esp-bom@LNTEBG.com

12, Shivaji Nagar
North Ambajhari Road
Nagpur 440 010
Tel: 0712-2260012 / 6606421
Fax: 2260030 / 6606434
e-mail: esp-nag@LNTEBG.com

32, Shivaji Marg
P. O. Box 6223
New Delhi 110 015
Tel: 011-41419514 / 5 / 6
Fax: 011-41419600
e-mail: esp-del@LNTEBG.com

L&T House
P. O. Box 119
191/1, Dhole Patil Road
Pune 411 001
Tel: 020-66033395 / 66033279
Fax: 020-26164048 / 26164910
e-mail: esp-pnq@LNTEBG.com

Crystal Tower,
4th Floor, G. E. Road
Telibandha
Raipur - 492 006
Tel: 0771-4283214
e-mail: esp-raipur@LNTEBG.com

3rd Floor
Vishwakarma Chambers
Majura Gate, Ring Road
Surat 395 002
Tel: 0261-2473726
Fax: 0261-2477078
e-mail: esp-sur@LNTEBG.com

Radhadaya Complex
Old Padra Road
Near Charotar Society
Vadodara 390 007
Tel: 0265-6613610 / 1 / 2
Fax: 0265-2336184
e-mail: esp-bar@LNTEBG.com

Door No. 49-38-14/3/2, 1st floor,
NGGO's Colony, Akkayyapalem,
Vishakhapatnam - 530 016
Phone: 0891 6581023
e-mail: esp-viz@LNTEBG.com

Product improvement is a continuous process. For the latest information and special applications, please contact any of our offices listed here.

L&T SWITCHGEAR
SAFE & SURE

LARSEN & TOUBRO

Larsen & Toubro Limited Electrical Standard Products
Powai Campus, Mumbai 400 072
Customer Interaction Center (CIC)
BSNL / MTNL (toll free) : 1800 233 5858
Reliance (toll free) : 1800 200 5858
Tel : 022 6774 5858, Fax : 022 6774 5859
E-mail : cic@LNTEBG.com Website : www.LNTEBG.com

Registered Office: L&T House, N. M. Marg, Ballard Estate, Mumbai 400 001, INDIA

SP 50437 R5